

潜孔钻具
DTH DRILLING
PRODUCTS

XIAMEN BESTLINK

BESTLINK
倍联机械

车间展示 Workshop gallery















目录 CONTENTS

低风压潜孔冲击器 Low air pressure DTH hammers	01
中风压潜孔冲击器 Middle air pressure DTH hammers	02
有尼龙管型高风压潜孔冲击器 High air pressure with foot valve DTH hammers	03-06
无尼龙管型高风压潜孔冲击器 High air pressure without foot valve DTH hammers	07-11
水井、桩和石油钻井用冲击器 Big hole high air pressure DTH hammers	12-13
反循环冲击器 Reverse circulation hammers	14-16
潜孔钻头 Down the hole bits	17-26
跟管钻具 Overburden drilling	27-30
扩孔钻头 Hole opener bits	31-32
长尾巴钻头和反打冲击器 Long shank bit & Back hammer	33
钻管和接头 Drill tube & Adapters	34-35
冲击器拆卸台 Breakout bench for DTH hammer	36
潜孔冲击器的使用与维护 Operation and maintainence guidelines	38

XIAMEN BEST LINK

低风压潜孔冲击器
Low air pressure DTH hammers

HR series DTH hammer, a kind of valve-equipped low-air-pressure hammer with a single piston, a plate valve and a central exhaust structure. The compressed air is adopted as the driving force. To prevent dust pollution and get a better performance, some high-pressure water may be added into the air for wet rock drilling.

Main Characteristics:

1.The strong energy of single impact and the low energy consumption in rock crushing;

2. The weight ratio of piston and bit almost reaches 1:1 to provide long effective acting time, which leads to the improved efficiency in rock crushing and the extended service life of the drilling tools;

3.A good performance in central air exhaust and cutting discharge, which reduces the repeated crushing of rock;

4.A check valve device is available to drill holes under water

The HR series DTH hammer, and ideal drilling tools, is widely used in such industries relating to energy, transportation, metallurgy, building etc.

Technical Data

DTH hammer type		HR90	HR110	HR150
Length (less bit) mm		800	839	908
Weight(excluding bits) kg		19	32	69
External diameter mm		Φ80	Φ98	Φ137
Bit shank		**CIR90**	**CIR110**	**CIR150**
Hole range(mm)		Φ85 -110	Φ110 -135	Φ155 -178
Connection thread		T48*10*2	API 2 3/8"Reg box	T75*10*2.5Box
Working pressure		0.5-0.7Mpa	0.5-0.7Mpa	0.5-0.7Mpa
Impact rate at 0.5Mpa		14Hz	14Hz	13Hz
Recommended Rotation speed		25-40r/min	25-40r/min	25-40r/min
Air consumption	0.5Mpa	6.5m^3/min	9.5m^3/min	15.0m^3/min
	0.7Mpa	8.0m^3/min	11.0m^3/min	17.0m^3/min

Breakdown design and spare parts list

SN.	Item description	部件名	weight(kg)		
	Hammer		HR90	HR110	HR150
1	Top sub	接头	2.80	5.00	10.40
2	Valve Seal	顶头	0.01	0.01	0.03
3	Check Valve	逆止阀	0.02	0.02	0.035
4	Spring	弹簧	0.01	0.005	0.015
5	Compression buffer	承压垫	0.01	0.015	0.06
6	"O" ring	胶圈	0.01	0.01	0.035
7	Valve cover	阀盖	0.60	0.80	2.00
8	Guide tube	导向管	0.01	0.01	0.02
9	Valve	阀片	0.01	0.015	0.05
10	Air distributor	阀座	0.60	1.00	2.60
11	Internal cylinder	内缸	2.00	2.80	5.40
12	Piston	活塞	4.00	7.00	14.00
13	External cylinder	外缸	5.80	8.80	22.20
14	Guide sleeve	衬套	1.20	1.40	3.20
15	Stop ring	挡柱	0.01	0.01	0.025
16	Drive chuck	卡钎套	1.60	3.80	8.20
17	Drill bits	钻头	3.50	6.40	12.50

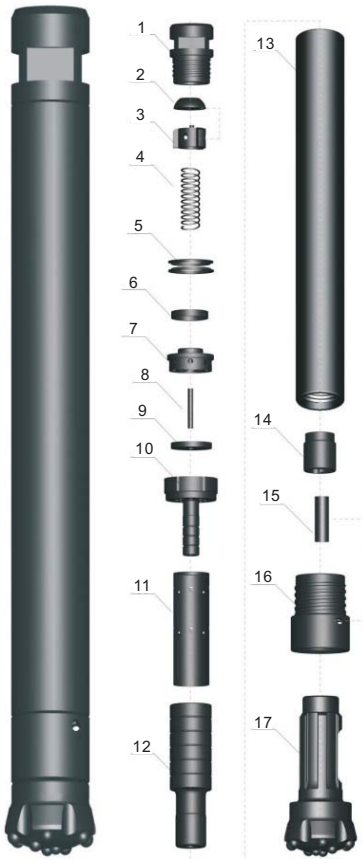

SHANGHAI BEST LINK

中风压潜孔冲击器
Middle air pressure DTH hammers

HBR1A,HBR2A and HBR3A series DTH hammers are designed to operate efficiently at low air pressures and medium air pressures, using BR series bits.

The main features are as follows:

1.The operation air pressures are between 0.7Mpa to 1.75Mpa;
2.Valveless hammers;
3.Simple structure, easy to assemble and to disassemble, long life;
4.Higher impact frequency and faster drilling speed;
5.Lower air consumption and lower oil consumption. A hole can be drilled on the check valve to provide more efficient cuttings discharge.
6.Especially suitable for quarrying.

Technical Data

DTH hammer type		HBR1A	HBR2A	HBR3A
Length (less bit) mm		760	880	889
Weight(excluding bits) kg		10	14.5	26
External diameter mm		Φ54	Φ62	Φ82
Bit shank		BR1	BR2	BR3
Hole range(mm)		Φ64-76	Φ70-90	Φ90-110
Connection thread		RD40 Box	RD50 Box	API 2 3/8"Reg
Working pressure		0.7-1.75Mpa	0.7-1.75Mpa	0.7-1.75Mpa
Impact rate at 1.4Mpa		27Hz	25Hz	25Hz
Recommended Rotation speed		25-40r/min	25-40r/min	25-40r/min
Air consumption	0.7Mpa	1.5m^3/min	2.5m^3/min	4.0m^3/min
	1.0Mpa	2.5m^3/min	4.0m^3/min	6.0m^3/min
	1.4Mpa	3.0m^3/min	5.0m^3/min	8.0m^3/min

Breakdown design and spare parts list

SN.	Item description	部件名	weight(kg)		
	Hammer		HBR1A	HBR2A	HBR3A
1	Top sub	接头	1.70	2.60	5.20
2	"O" ring of top sub	接头O形圈	/	/	0.01
3	Check Valve	逆止阀	0.1	0.1	0.2
4	Spring	弹簧	0.05	0.05	0.02
5	Air distributor	配气座	0.8	0.6	0.8
6	Internal cylinder	内缸	0.8	0.8	1.3
7	Piston	活塞	1.20	3.8	5.50
8	External cylinder	外缸	4	4.50	9.5
9	Guide sleeve	衬套	0.15	0.6	1
10	"O" ring of stop ring	卡环O形圈	0.05	0.005	0.05
11	Stop ring	卡环	0.10	0.10	0.15
12	Drive chuck	卡环套	0.80	1.20	2.00
13	Drill bits	钻头	1.70	2.50	4.00

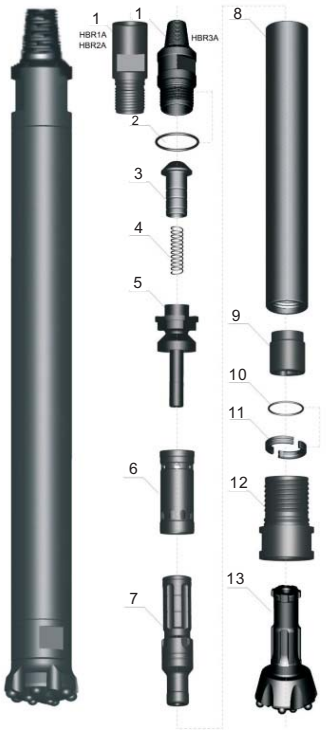

有尼龙管型高风压潜孔冲击器
High air pressure with foot valve DTH hammers

It is a kind of valveless high air pressure DTH hammer with foot valve.

Advantages:

1.Valveless air distribution, more reliable;

2.Piston with simple but compact design, long life;

3.More efficient energy transfer, faster drilling speed, lower air consumption and lower oil consumption.

4.Fewer internal parts, simple structure, longer life, less failure and easier to maintain, with the all heat treated parts;

5.Easy to disassemble, thanks for the top sub, drive chuck and external cylinder all are connected by multi-step thread.

Technical Data

DTH hammer type		HD35	HD45	HSD4	HSD5	HD55
Length (less bit) mm		930mm	1030	1084	1175	1214
Weight(excluding bits) kg		25	39	40.5	72.5	76.5
External diameter mm		Φ82mm	Φ99	Φ99	Φ125	Φ125
Bit shank		DHD3.5	COP44 DHD340	SD4	SD5	COP54 DHD350R
Hole range(mm)		Φ90-110	Φ110-135	Φ110-135	Φ135-155	Φ135-155
Connection thread		API 2 3/8"Reg	API 2 3/8"Reg	API 2 3/8"Reg	API 3 1/2"Reg	API 2 3/8"Reg
		/	/	/	/	API 3 1/2"Reg
Working pressure		1.0-1.5Mpa	1.0-2.5Mpa	1.0-2.5Mpa	1.0-2.5Mpa	1.0-2.5Mpa
Impact rate at 1.5-1.7Mpa		28Hz	27Hz	27Hz	25Hz	25Hz
Recommended Rotation speed		25-40r/min	25-40r/min	25-40r/min	20-35r/min	20-35r/min
Air consumption	1.0Mpa	4.5m^3/min	6.0m^3/min	6.0m^3/min	9.0m^3/min	9.0m^3/min
	1.8Mpa	9.0m^3/min	10.0m^3/min	10.0m^3/min	15.0m^3/min	15.0m^3/min
	2.4Mpa	/	15.0m^3/min	15.0m^3/min	23.0m^3/min	23.0m^3/min

Breakdown design and spare parts list

SN.	Item description	部件名	weight(kg)				
	Hammer		HD35	HD45	HSD4	HSD5	HD55
1	Top sub	接头	4.20	6.50	6.50	15.00	15.00
2	"O" ring of top sub	接头O形圈	0.01	0.01	0.01	0.01	0.01
3	Check Valve	逆止阀	0.20	0.42	0.42	1.00	1.00
4	Spring	弹簧	0.02	0.04	0.04	0.10	0.04
5	Compression buffer	承压垫	0.02	0.04	0.04	0.05	0.06
6	Air distributor	配气座	1.40	2.20	2.20	3.50	3.70
7	Internal cylinder	内缸	1.50	2.30	2.50	4.20	4.50
8	Piston	活塞	5.60	9.00	9.00	15.50	15.50
9	External cylinder	外缸	9.90	15.00	15.60	25.00	30.00
10	"O" ring of stop ring	卡环O形圈	0.01	0.01	0.02	0.01	0.01
11	Stop ring	卡环	0.15	0.20	0.20	0.50	0.30
12	Drive chuck	卡环套	1.90	3.50	4.00	7.50	6.40
13	Drill bits	钻头	5.00	9.00	9.60	15.60	16.00

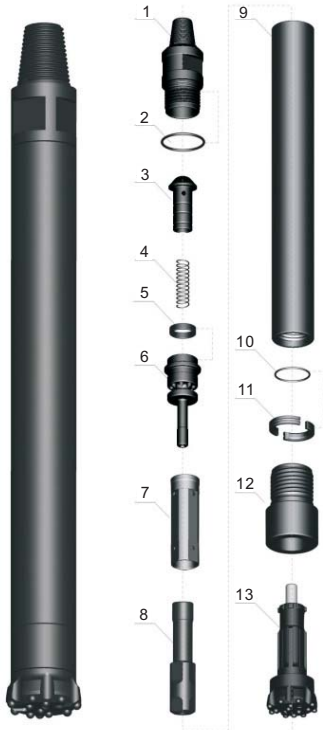

有尼龙管型高风压潜孔冲击器
High air pressure with foot valve DTH hammers

Technical Data

DTH hammer type		HQL4	HD55C	HQL5	HD65	HSD6	HQL6
Length (less bit) mm		1097	1160	1156	1248	1261	1212
Weight(excluding bits) kg		41.00	72.5	73	100	100	95
External diameter mm		Φ99	Φ125	Φ125	Φ142	Φ142	Φ146
Bit shank		QL40	HD55C DHD350Q	QL50	COP64 DHD360	SD6	QL60
Hole range(mm)		Φ110-135	Φ135-155	Φ135-155	Φ155-190	Φ155-190	Φ155-190
Connection thread		API 2 3/8"Reg	API 2 3/8"Reg	API 3 1/2"Reg	API 3 1/2"Reg	API 3 1/2"Reg	API 3 1/2"Reg
		/	API 3 1/2"Reg	/	/	/	/
Working pressure		1.0-2.5Mpa	1.0-2.5Mpa	1.0-2.5Mpa	1.0-2.5Mpa	1.0-2.5Mpa	1.0-2.5Mpa
Impact rate at 1.5-1.7Mpa		27Hz	25Hz	25Hz	23Hz	23Hz	23Hz
Recommended Rotation speed		25-40r/min	20-35r/min	20-35r/min	20-30r/min	20-30r/min	20-30r/min
Air consumption	1.0Mpa	6.0m^3/min	9.0m^3/min	9.0m^3/min	10.0m^3/min	10.0m^3/min	10.0m^3/min
	1.8Mpa	10.0m^3/min	15.0m^3/min	15.0m^3/min	20.0m^3/min	20.0m^3/min	20.0m^3/min
	2.4Mpa	15.0m^3/min	23.0m^3/min	23.0m^3/min	28.5m^3/min	28.5m^3/min	28.5m^3/min

Breakdown design and spare parts list

SN.	Item description	部件名	weight(kg)					
	Hammer		HQL4	HD55C	HQL5	HD65	HSD6	HQL6
1	Top sub	接头	6.50	13.70	15.00	20.00	20.00	20.00
2	"O" ring of top sub	接头O形圈	0.01	0.01	0.015	0.02	0.01	0.02
3	Check Valve	逆止阀	0.42	1.00	1.00	1.00	1.00	1.00
4	Spring	弹簧	0.04	0.04	0.1	0.04	0.05	0.10
5	Compression buffer	承压垫	0.04	0.08	0.1	0.08	0.10	0.10
6	Air distributor	配气座	2.20	3.50	3.50	5.00	5.00	6.00
7	Internal cylinder	内缸	2.30	4.20	4.20	5.00	5.00	5.00
8	Piston	活塞	8.80	17.20	19.00	23.60	24.00	23.50
9	External cylinder	外缸	16.50	26.50	24.60	36.80	35.00	31.00
10	Guided sleeve	衬套	0.80	1.20	0.90	2.40	1.50	1.00
11	"O"ring	卡环O型圈	0.01	0.01	0.01	0.02	0.01	0.02
12	Stop ring	卡环	0.30	0.50	0.40	0.60	0.50	0.60
13	Drive chuck	卡钎套	3.00	4.50	4.60	6.00	7.50	5.40
14	Drill bits	钻头	9.50	15.60	15.50	26.00	25.80	24.60



有尼龙管型高风压潜孔冲击器
High air pressure with foot valve DTH hammers

Technical Data

DTH hammer type		HD85	HN100	NH125
Length (less bit) mm		1492	1510	1900
Weight(excluding bits) kg		188	288	480
External diameter mm		Φ180	Φ226	Φ275
Bit shank		COP84 DHD380	NUMA100	NUMA125
Hole range(mm)		Φ195-254	Φ254-311	Φ305-445
Connection thread		API 4 1/2"Reg	API 6 5/8"Reg	API 6 5/8"Reg
Working pressure		1.0-2.5Mpa	1.0-2.5Mpa	1.0-2.5Mpa
Impact rate at 1.5-1.7Mpa		20Hz	18Hz	16Hz
Recommended Rotation speed		20-30r/min	15-25r/min	15-25r/min
Air consumption	1.0Mpa	15.0m³/min	22.0m³/min	30.0m³/min
	1.8Mpa	26.0m³/min	45.0m³/min	56.0m³/min
	2.4Mpa	34.0m³/min	60.0m³/min	78.0m³/min

Breakdown design and spare parts list

SN.	Item description	部件名	weight(kg)		
	Hammer		HD85	HN100	HN125
1	Top sub	接头	41.00	59.00	70.00
2	"O"ring of top sub	接头O型圈	0.02	0.03	0.04
3	Breakout ring	接头垫片	0.20	0.40	0.80
4	Check Valve	逆止阀	1.50	1.60	3.00
5	Spring	弹簧	0.1	0.30	0.10
6	Compression buffer	承压垫	0.42	0.60	1.00
7	Air distributor	配气座	0.13	11.50	20.00
8	Internal cylinder	内缸	8.60	11.00	23.00
9	Piston	活塞	41.00	62.00	125.00
10	External cylinder	外缸	62.00	112.00	170.00
11	"O"ring of stop ring	卡环O型圈	0.02	0.03	0.01
12	Stop ring	卡环	1.20	1.50	4.00
13	Breakout ring	卡钎套垫片	0.20	0.40	0.80
14	Drive chuck	卡钎套	17.50	26.00	45.00
15	Drill bits	钻头	40.00	115.00	175.00



有尼龙管型高风压潜孔冲击器
High air pressure with foot valve DTH hammers

Technical Data

DTH hammer type		HSD8	HQL8	HSD10	HD1120	HSD12	HN120
Length (less bit) mm		1463	1465	1502	1900	1880	1900
Weight(excluding bits) kg		192	182	290	480	487	485
External diameter mm		Φ180	Φ180	Φ226	Φ275	Φ275	Φ275
Bit shank		SD8	QL80	SD10	DHD1120	SD12	NUMA120
Hole range(mm)		Φ195-254	Φ195-254	Φ254-311	Φ305-455	Φ305-455	Φ305-455
Connection thread		API 4 1/2"Reg	API 4 1/2"Reg	API 4 1/2"Reg	API 6 5/8"Reg	API 6 5/8"Reg	API 6 5/8"Reg
		/	/	API 6 5/8"Reg	/	/	/
Working pressure		1.0-2.5Mpa	1.0-2.5Mpa	1.0-2.5Mpa	1.0-2.5Mpa	1.0-2.5Mpa	1.0-2.5Mpa
Impact rate at 1.5-1.7Mpa		20Hz	20Hz	18Hz	16Hz	16Hz	16Hz
Recommended Rotation speed		15-25r/min	15-25r/min	15-25r/min	15-25r/min	15-25r/min	15-25r/min
Air consumption	1.0Mpa	15.0m^3/min	15.0m^3/min	22.0m^3/min	30.0m^3/min	30.0m^3/min	30.0m^3/min
	1.8Mpa	26.0m^3/min	26.0m^3/min	40.0m^3/min	56.0m^3/min	56.0m^3/min	56.0m^3/min
	2.4Mpa	34.0m^3/min	34.0m^3/min	55.0m^3/min	78.0m^3/min	78.0m^3/min	78.0m^3/min

Breakdown design and spare parts list

SN.	Item description	部件名	weight(kg)					
	Hammer		HSD8	HQL8	HSD10	HD1120	HSD12	HN120
1	Top sub	接头	41.00	41.00	59.00	70.00	70.00	70.00
2	"O"ring of top sub	接头O型圈	0.02	0.02	0.03	0.04	0.04	0.04
3	Breakout ring	接头垫片	0.2	0.3	0.30	0.80	0.80	0.80
4	Check Valve	逆止阀	1.50	1.50	1.40	3.00	3.00	3.00
5	Spring	弹簧	0.1	0.1	0.30	0.10	0.10	0.10
6	Compression buffer	承压垫	0.42	0.42	0.60	1.00	1.00	1.00
7	Air distributor	配气座	12.50	13.00	11.50	20.00	20.00	20.00
8	Internal cylinder	内缸	8.60	8.60	11.00	23.00	23.00	23.00
9	Piston	活塞	42.00	41.00	62.00	125.00	125.00	125.00
10	External cylinder	外缸	65.00	60.00	110.00	170.00	170.00	170.00
11	"O"ring of stop ring	卡环O型圈	0.05	0.02	0.03	0.04	0.04	0.04
12	Stop ring	卡环	1.20	1.20	1.60	4.50	4.80	4.50
13	Guided sleeve	衬套	3.40	2.20	4.50	16.00	18.00	18.00
14	Breakout ring	卡钎套垫片	0.20	0.30	0.30	0.80	0.80	0.80
15	Drive chuck	卡钎套	15.50	12.00	24.00	48.00	51.00	49.00
16	Drill bits	钻头	37.00	35.00	115.00	120.00	120.00	120.00

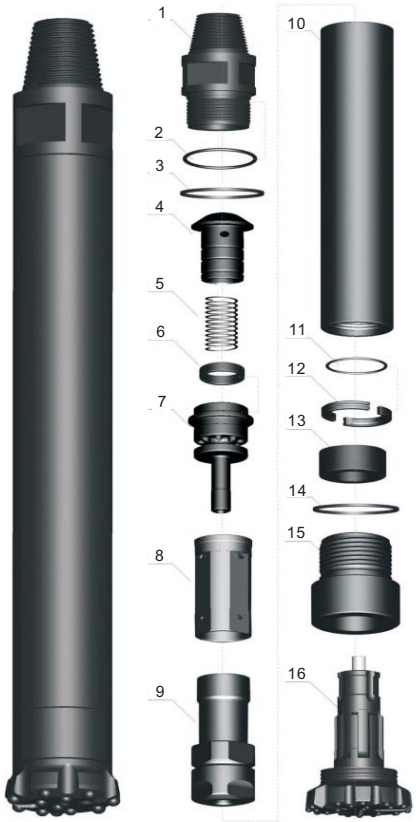

无尼龙管型高风压潜孔冲击器
High air pressure without foot valve DTH hammers

It's a king of high air pressure DTH hammer without footvalve,our newest design. it's also one of the most advanced DTH hammer in the world.

It has the following advantages:

1.Out of the trouble of foot valve fracture and expansion and contraction;
2.Lower energy consumption and higher impact frequency. The drilling speed is 15-30% higher than the one with foot valve;
3.Simple structure, reliable parts, long life, easy and cheap maintenance;
4.Lower air and oil consumption, the oil consumption is about 10% lower than the one with foot valve.
*According to your request, the top sub can be made into two spanners, an air controlling hole can be drilled on the check valve to provide more efficient cuttings discharge.

Technical Data

DTH hammer type		HD25A	HD35A	HD45A	HD45S	HSD4A	HM4A
Length (less bit) mm		872	888	1011	986	1012	1005
Weight(excluding bits) kg		16	25	43.2	37	40	40
External diameter mm		Φ71	Φ82	Φ99	Φ92	Φ99	Φ99
Bit shank		HD25	IR3.5	COP44 DHD340	COP44 DHD340	SD4	HM4
Hole range(mm)		Φ76-90	Φ90-115	Φ110-135	Φ105-120	Φ110-135	Φ110-135
Connection thread		T42*10*1.5	API 2 3/8"Reg	API 2 3/8"Reg	API 2 3/8"Reg	API 2 3/8"Reg	API 2 3/8"Reg
Working pressure		1.0-1.5Mpa	1.0-1.5Mpa	1.0-1.5Mpa	1.0-1.5Mpa	1.5-2.0Mpa	1.0-2.5Mpa
Impact rate at 1.5/1.7Mpa		25Hz	25Hz	30Hz	30Hz	30Hz	30Hz
Recommended Rotation speed		22-35r/min	25-40r/min	22-35r/min	25-40r/min	25-40r/min	25-40r/min
Air consumption	1.0Mpa	4.0m³/min	3.8m³/min	6.0m³/min	5.0m³/min	6.0m³/min	5.0m³/min
	1.5/1.8Mpa	6.0m³/min	7.5m³/min	10.0m³/min	8.0m³/min	9.0m³/min	9.0m³/min
	2.4Mpa	/	/	15.0m³/min	13.0m³/min	14.0m³/min	14.0m³/min

Breakdown design and spare parts list

SN.	Item description	部件名	weight(kg)					
	Hammer		HD25A	HD35A	HD45A	HD45S	HSD4A	HM4A
1	Top sub	接头	3.10	4.20	6.50	6.00	6.50	6.50
2	"O" ring of top sub	接头O形圈	/	0.01	0.01	0.01	0.01	0.01
3	Check Valve	逆止阀	0.10	0.20	0.35	0.30	0.35	0.35
4	Spring	弹簧	0.05	0.02	0.05	0.05	0.05	0.05
5	Air distributor	配气座	0.60	0.80	1.50	1.30	1.50	1.50
6	Internal cylinder	内缸	0.80	1.30	2.10	1.90	2.10	2.10
7	Piston	活塞	3.80	5.50	8.50	7.80	8.50	8.50
8	External cylinder	外缸	4.50	9.50	15.20	14.60	15.30	14.80
9	Guide sleeve	衬套	0.60	1.00	1.30	1.20	1.30	1.80
10	"O" ring of stop ring	卡环O形圈	0.005	0.05	0.01	0.005	0.005	0.005
11	Stop ring	卡环	0.10	0.15	0.30	0.20	0.20	0.30
12	Drive chuck	卡钎套	1.40	1.90	3.40	3.40	4.00	3.80
13	Drill bit	钻头	3.2	5.00	9.00	8.50	9.80	6.60



无尼龙管型高风压潜孔冲击器
High air pressure without foot valve DTH hammers

Technical Data

DTH hammer type		HQL4A	HD55A	HD55S	HD55C(A)	HM5A	HSD5A
Length (less bit) mm		1070	1110	1110	1102	1110	1090
Weight(excluding bits) kg		40	69	66	68	68.5	70
External diameter mm		Φ99	Φ125	Φ116	Φ125	Φ125	Φ125
Bit shank		QL40	COP54 DHD350R	COP54 DHD350R	HD55C DHD350Q	HM5	SD5
Hole range(mm)		Φ110 -135	Φ135-155	Φ127-145	Φ135-155	Φ135-155	Φ135-155
Connection thread		API 2 3/8"Reg	API 2 3/8"Reg	API 2 3/8"Reg	API 2 3/8"Reg	API 2 3/8"Reg	API 2 3/8"Reg
		/	API 3 1/2"Reg	API 3 1/2"Reg	API 3 1/2"Reg	API 3 1/2"Reg	API 3 1/2"Reg
Working pressure		1.0-2.5Mpa	1.0-2.5Mpa	1.0-2.5Mpa	1.0-2.5Mpa	1.0-2.5Mpa	1.0-2.5Mpa
Impact rate at 1.7Mpa		30Hz	28Hz	28Hz	28Hz	28Hz	28Hz
Recommended Rotation speed		25-40r/min	20-35r/min	20-35r/min	20-35r/min	20-35r/min	20-35r/min
Air consumption	1.0Mpa	5.0m^3/min	7.0m^3/min	7.0m^3/min	8.0m^3/min	7.0m^3/min	7.0m^3/min
	1.8Mpa	9.0m^3/min	14.0m^3/min	13.5m^3/min	14.0m^3/min	14.0m^3/min	14.0m^3/min
	2.4Mpa	14.0m^3/min	19.0m^3/min	18.0m^3/min	19.0m^3/min	19.0m^3/min	19.0m^3/min

Breakdown design and spare parts list

SN.	Item description	部件名	weight(kg)					
	Hammer		HQL4A	HD55A	HD55S	HD55C(A)	HM5A	HSD5A
1	Top sub	接头	6.50	13.70	13.30	13.70	13.70	13.70
2	"O" ring of top sub	接头O形圈	0.01	0.015	0.015	0.015	0.015	0.015
3	Check Valve	逆止阀	0.35	0.70	0.70	0.70	0.70	0.70
4	Spring	弹簧	0.05	0.10	0.10	0.10	0.10	0.10
5	Air distributor	配气座	1.50	2.00	1.90	2.00	2.00	2.00
6	Internal cylinder	内缸	2.10	2.80	2.70	2.80	2.80	2.80
7	Piston	活塞	8.50	15.00	14.50	15.00	15.00	15.00
8	External cylinder	外缸	15.20	24.00	23.00	25.00	24.00	24.00
9	Guide sleeve	衬套	1.80	2.60	2.50	3.20	2.60	2.60
10	"O" ring of stop ring	卡环O形圈	0.005	0.01	0.01	0.01	0.01	0.01
11	Stop ring	卡环	0.20	0.50	0.50	0.50	0.70	0.50
12	Drive chuck	卡钎套	3.20	6.50	6.20	4.00	6.50	7.50
13	Drill bit	钻头	9.00	16.00	15.50	15.90	13.50	16.00



无尼龙管型高风压潜孔冲击器
High air pressure without foot valve DTH hammers

Technical Data

DTH hammer type		HQL5A	HD65A	HM65A	HSD6A	HQL6A	HD75A
Length (less bit) mm		1090	1238	1161	1182	1183	1258
Weight(excluding bits) kg		67	98	90	90	92	120
External diameter mm		Φ125	Φ142	Φ146	Φ146	Φ146	Φ165
Bit shank		QL50	COP64 DHD360	HM65A	SD6	QL60	COP64 DHD360
Hole range(mm)		Φ135-155	Φ155-203	Φ155-203	Φ155-203	Φ155-203	Φ175-216
Connection thread		API 2 3/8"Reg	API 3 1/2"Reg	API 3 1/2"Reg	API 3 1/2"Reg	API 3 1/2"Reg	API 3 1/2"Reg
		API 3 1/2"Reg	/	/	/	/	/
Working pressure		1.0-2.5Mpa	1.0-2.5Mpa	1.0-2.5Mpa	1.0-2.5Mpa	1.0-2.5Mpa	1.0-2.5Mpa
Impact rate at 1.7Mpa		28Hz	25Hz	25Hz	25Hz	25Hz	23Hz
Recommended Rotation speed		20-35r/min	20-30r/min	20-30r/min	20-30r/min	20-30r/min	20-30r/min
Air consumption	1.0Mpa	7.0m³/min	9.0m³/min	9.0m³/min	9.0m³/min	9.0m³/min	11.0m³/min
	1.8Mpa	14.0m³/min	18.0m³/min	18.0m³/min	18.0m³/min	18.0m³/min	20.0m³/min
	2.4Mpa	19.0m³/min	26.0m³/min	26.0m³/min	26.0m³/min	26.0m³/min	28.0m³/min

Breakdown design and spare parts list

SN.	Item description	部件名	weight(kg)					
	Hammer		HQL5A	HD65A	HM65A	HSD6A	HQL6A	HD75A
1	Top sub	接头	13.70	20.00	20.00	20.00	20.00	23.00
2	"O" ring of top sub	接头O形圈	0.015	0.02	0.015	0.015	0.015	0.015
3	Check Valve	逆止阀	0.70	0.70	0.70	0.70	0.70	0.70
4	Spring	弹簧	0.10	0.10	0.10	0.10	0.10	0.10
5	Air distributor	配气座	2.00	3.50	3.50	3.50	3.50	4.50
6	Internal cylinder	内缸	2.70	4.20	4.20	4.20	4.20	6.50
7	Piston	活塞	15.00	23.00	23.00	23.00	23.00	28.00
8	External cylinder	外缸	24.00	31.50	26.00	28.00	30.00	40.00
9	Guide sleeve	衬套	3.00	6.50	4.80	2.50	4.00	7.50
10	"O" ring of stop ring	卡环O形圈	0.01	0.01	0.01	0.01	0.01	0.01
11	Stop ring	卡环	0.40	0.60	0.80	0.50	0.60	0.80
12	Drive chuck	卡钎套	4.50	6.00	4.20	7.50	5.50	8.00
13	Drill bit	钻头	16.00	26.00	23.00	27.00	25.00	28.50



无尼龙管型高风压潜孔冲击器
High air pressure without foot valve DTH hammers

Technical Data

DTH hammer type		HD85A	HM8A	HSD8A	HQL8A	HQL95A	HSD10A
Length (less bit) mm		1359	1338	1330	1330	1340	1525
Weight(excluding bits) kg		175	176	174	171	203	316
External diameter mm		Φ180	Φ180	Φ180	Φ180	Φ203	Φ226
Bit shank		COP84 DHD380	HM8A	SD8	QL80	QL80	SD10
Hole range(mm)		Φ195-254	Φ195-254	Φ195-254	Φ195-254	Φ216-254	Φ254-311
Connection thread		API 4 1/2"Reg	API 4 1/2"Reg	API 4 1/2"Reg	API 4 1/2"Reg	API 4 1/2"Reg	API 6 5/8"Reg
Working pressure		1.0-2.5Mpa	1.0-2.5Mpa	1.0-2.5Mpa	1.0-2.5Mpa	1.0-2.5Mpa	1.0-2.5Mpa
Impact rate at 1.7Mpa		22Hz	22Hz	22Hz	22Hz	22Hz	20Hz
Recommended Rotation speed		15-25r/min	15-25r/min	15-25r/min	15-25r/min	15-25r/min	15-25r/min
Air consumption	1.0Mpa	12.0m^3/min	12.0m^3/min	12.0m^3/min	12.0m^3/min	16.0m^3/min	22.0m^3/min
	1.8Mpa	22.0m^3/min	22.0m^3/min	22.0m^3/min	22.0m^3/min	28.0m^3/min	40.0m^3/min
	2.4Mpa	28.0m^3/min	28.0m^3/min	28.0m^3/min	28.0m^3/min	39.0m^3/min	65.0m^3/min

Breakdown design and spare parts list

SN.	Item description	部件名	weight(kg)					
	Hammer		HD85A	HM8A	HSD8A	HQL8A	HQL95A	HSD10A
1	Top sub	接头	34.00	34.00	34.00	34.00	35.00	59.00
2	"O" ring of top sub	接头O形圈	0.015	0.015	0.015	0.015	0.01	0.03
3	Breakout ring	接头垫片	0.30	0.30	0.30	0.30	0.40	0.50
4	Check Valve	逆止阀	1.20	1.20	1.20	1.20	1.20	1.40
5	Spring	弹簧	0.10	0.10	0.10	0.10	0.10	0.30
6	Air distributor	配气座	6.00	6.00	6.00	6.00	7.00	10.50
7	Internal cylinder	内缸	6.50	6.50	6.50	6.50	7.50	12.50
8	Piston	活塞	42.50	42.50	42.50	42.50	48.00	77.00
9	External cylinder	外缸	60.00	61.00	59.00	59.00	75.00	110.00
10	Guide sleeve	衬套	5.30	5.30	6.00	6.30	12.00	11.50
11	"O"ring of stop ring	卡环O型圈	0.01	0.01	0.01	0.01	0.01	0.01
12	Stop ring	卡环	1.20	1.50	1.20	1.40	1.70	1.50
13	Breakout ring	卡钎套垫片	0.30	0.30	0.30	0.30	0.40	0.50
14	Drive chuck	卡钎套	17.50	17.30	16.00	13.00	15.00	31.50
15	Drill bits	钻头	40.00	31.00	37.00	35.00	50.00	108.00



无尼龙管型高风压潜孔冲击器
High air pressure without foot valve DTH hammers

Technical Data

DTH hammer type		HN100A	HD1120A	HSD12A	HN120A	HN125A
Length (less bit) mm		1545	1880	1860	1880	1880
Weight(excluding bits) kg		305	474	480	475	470
External diameter mm		Φ226	Φ275	Φ275	Φ275	Φ275
Bit shank		NUMA100	DHD1120	SD12	NUMA120	NUMA125
Hole range(mm)		Φ254-311	Φ305-445	Φ305-445	Φ305-445	Φ305-445
Connection thread		API 6 5/8"Reg	API 6 5/8"Reg	API 6 5/8"Reg	API 6 5/8"Reg	API 6 5/8"Reg
Working pressure		1.0-2.5Mpa	1.0-2.5Mpa	1.0-2.5Mpa	1.0-2.5Mpa	1.0-2.5Mpa
Impact rate at 1.7Mpa		20Hz	20Hz	20Hz	20Hz	20Hz
Recommended Rotation speed		15-25r/min	15-25r/min	15-25r/min	15-25r/min	15-25r/min
Air consumption	1.0Mpa	22.0m^3/min	28.0m^3/min	28.0m^3/min	28.0m^3/min	28.0m^3/min
	1.8Mpa	40.0m^3/min	50.0m^3/min	50.0m^3/min	50.0m^3/min	50.0m^3/min
	2.4Mpa	65.0m^3/min	71.0m^3/min	71.0m^3/min	71.0m^3/min	71.0m^3/min

Breakdown design and spare parts list

SN.	Item description	部件名	weight(kg)				
	Hammer		HN100A	HD1120A	HSD12A	HN120A	HN125A
1	Top sub	接头	59.00	70.00	70.00	70.00	70.00
2	"O" ring of top sub	接头O形圈	0.03	0.04	0.04	0.04	0.04
3	Breakout ring	接头垫片	0.5	0.8	0.8	0.8	0.8
4	Check Valve	逆止阀	1.40	2.00	2.00	2.00	2.00
5	Spring	弹簧	0.30	0.10	0.10	0.10	0.10
6	Air distributor	配气座	10.50	16.00	16.00	16.00	16.00
7	Internal cylinder	内缸	12.50	25.00	25.00	25.00	25.00
8	Piston	活塞	77.00	113.00	113.00	113.00	113.00
9	External cylinder	外缸	110.00	173.00	175.00	170.00	170.00
10	Guide sleeve	衬套	4.50	24.00	25.00	25.00	23.00
11	"O"ring of stop ring	卡环O型圈	0.02	0.01	0.01	0.01	0.01
12	Stop ring	卡环	1.90	4.00	4.50	4.50	4.00
13	Breakout ring	卡钎套垫片	0.50	0.80	0.80	0.80	0.80
14	Drive chuck	卡钎套	25.50	46.00	48.00	48.00	45.00
15	Drill bits	钻头	106.00	140.00	165.00	164.00	175.00



水井、桩和石油钻井用冲击器
Big hole high air pressure DTH hammers

Based on the characteristics of the wells, oil, gas and construction drilling, our company self-designed, developed and manufactured this kind of high air pressure DTH hammer.

It has the following characteristics:

1. Using the latest rock drilling theory, optimizing the inside structure and the size of the air distribution, to make the DTH Hammer obtain the optimal energy transfer and make it achieve faster drilling speed and lower air consumption.
2. For such projects as the drill bit break, retrieving very difficult, we specially designed a safe and reliable anti-shedding device for the bit.
3. The check valve can be replaced to the one with bigger ail controlling hole to provide more efficient cuttings discharge.
4. The top sub and the drive chuck have special thread, which can achieve an easier disassemble.

Technical Data

DTH hammer type		HD142A	HD180A	HD225A
Length (less bit) mm		1388	1520	1745
Weight(excluding bits) kg		102	178	315
External diameter mm		Φ142	Φ180	Φ225
Bit shank		DHD360	QL80	NUMA100
Hole range(mm)		Φ155-195	Φ195-254	Φ254-311
Connection thread		API 3 1/2"Reg	API 4 1/2"Reg	API 4 1/2"Reg
		/	/	API 6 5/8"Reg
Working pressure		1.0-2.5Mpa	1.0-2.5Mpa	1.0-2.5Mpa
Impact rate at 1.7Mpa		25Hz	20Hz	20Hz
Recommended Rotation speed		20-30r/min	20-30r/min	15-25r/min
Air consumption	1.0Mpa	9.0m³/min	12.0m³/min	22.0m³/min
	1.8Mpa	18.0m³/min	22.0m³/min	40.0m³/min
	2.4Mpa	26.0m³/min	28.0m³/min	65.0m³/min

Breakdown design and spare parts list

SN.	Item description	部件名	weight(kg)		
	Hammer		HD142A	HD180A	HD225A
1	Top sub	接头	20.00	34.00	59.00
2	"O" ring of top sub	接头0形圈	0.02	0.015	0.03
3	Breakout ring	接头垫片	/	0.6	0.8
4	Check Valve	逆止阀	0.70	1.20	1.40
5	Spring	弹簧	0.10	0.10	0.30
6	Air distributor	配气座	3.50	6.00	10.50
7	Internal cylinder	内缸	4.20	6.50	12.50
8	Piston	活塞	23.00	42.50	77.00
9	External cylinder	外缸	31.50	60.00	110.00
10	Guide sleeve	衬套	6.50	6.30	4.50
11	"O" ring of stop ring	卡环0形圈	0.01	0.01	0.02
12	Stop ring	卡环	0.60	1.40	1.90
13	Breakout ring	卡钎套垫片	0.20	0.60	0.80
14	Drive chuck	卡钎套	5.00	12.00	21.00
15	Retanier	防脱套	3.50	6.50	9.00
16	Drill bits	钻头	27.00	37.00	68.00

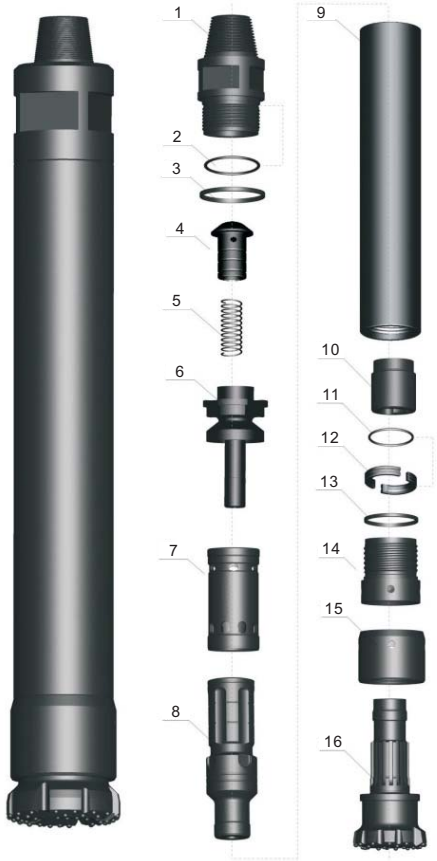

SHANGHAI BEST LINK

水井、桩和石油钻井用冲击器
Big hole high air pressure DTH hammers

Technical Data

DTH hammer type		HD275A	HD330A	HD475A	HD525A
Length (less bit) mm		2626	3870	4080	4260
Weight(excluding bits) kg		650	1050	2775	3626
External diameter mm		Φ275	Φ330	Φ475	Φ525
Bit shank		NUMA125	HD330	HD475	HD525
Hole range(mm)		Φ305-445	Φ350-660	Φ508-760	Φ610-800
Connection thread		API 6 5/8"Reg	API 7 5/8"Reg	API 8 5/8"Reg	API 8 5/8"Reg
		API 7 5/8"Reg	/	/	/
Working pressure		1.0-2.5Mpa	1.0-2.5Mpa	1.0-2.5Mpa	1.0-2.5Mpa
Impact rate at 1.7Mpa		20Hz	20Hz	20Hz	20Hz
Recommended Rotation speed		15-25r/min	15-25r/min	15-25r/min	15-25r/min
Air consumption	1.0Mpa	28.0m³/min	32.0m³/min	56.0m³/min	50.0m³/min
	1.8Mpa	50.0m³/min	58.0m³/min	75.0m³/min	80.0m³/min
	2.4Mpa	71.0m³/min	85.0m³/min	85..0m³/min	99.0m³/min

Breakdown design and spare parts list

SN.	Item description	部件名	weight(kg)			
	Hammer		HD275A	HD330A	HD475A	HD525A
1	Top sub	接头	230.00	320.00	800.00	960.00
2	"O" ring of top sub	接头0形圈	0.040	0.10	0.02	0.03
3	Breakout ring	接头垫片	1.00	2.00	3.55	5.00
4	Check Valve	逆止阀	2.00	5.00	13.50	18.00
5	Spring	弹簧	0.50	0.80	0.35	0.45
6	Air distributor	配气座	16.00	35.00	58.90	79.50
7	Internal cylinder	内缸	25.00	30.00	101.60	137.00
8	Piston	活塞	113.00	190.00	517.00	698.00
9	External cylinder	外缸	170.00	316.00	952.00	1285.00
10	Guide sleeve	衬套	23.00	38.00	98.00	132.00
11	"O" ring of stop ring	卡环0形圈	0.03	0.05	0.02	0.02
12	Stop ring	卡环	4.00	6.00	14.25	19.50
13	Breakout ring	卡钎套垫片	1.00	2.00	3.55	5.00
14	Drive chuck	卡钎套	34.00	64.00	162.00	219.00
15	Retanier	防脱套	30.00	42.00	50.00	67.50
16	Drill bits	钻头	185.00	240.00	528.00	1328.00



反循环冲击器
Reverse circulation hammers

RC series reverse circulation DTH Hammer is the latest developed product of our company. It is mainly used for deep exploration drilling and ore grade control.

It has the following characteristics:

1. Based on previous experience of ordinary hammers, combined with the features of reverse circulation hammer, optimized internal structure and ideal energy transfer, thus ensuring the series of hammers drilling with fast, smooth and continuous sampling.
2. The internal structure is very simple with components of high rigidity, thus ensuring long life and easy maintenance of the hammer.
3. The collection tube adopts an integrative design and can be replaced without disassembling the hammer. With carburizing treatment, it has good abrasive resistance.
4. Equipped with bits designed with patent. Simply by replacing the drill bit, the same hammer can drill holes of different sizes ensuring that the sample is not contaminated.
5. In difficult conditions such as loose soil, hard rock and plenty of water exists, sampling can be done well.

Technical Data

DTH hammer type		HRC45	DTH hammer type		HRC55	HRC65	HRC52
Length (less bit) mm		1020	Length (less bit) mm		1111	1250	1208
Weight(excluding bits) kg		94	Weight(excluding bits) kg		66.5	110	70
External diameter mm		Φ99	External diameter mm		Φ126	Φ146	Φ126
Bit shank		HRC45	Bit shank		HRC55	HRC65	PR52
Hole range(mm)		Φ114-127	Hole range(mm)		Φ133-152	Φ155-190	Φ133-146
Connection thread		upon the thread of the drill tube	Connection thread		upon the thread of the drill tube		
Working pressure		1.0-3.0Mpa	Working pressure		1.5-3.5Mpa	1.5-3.5Mpa	1.5-3.5Mpa
Impact rate at 1.7Mpa		30Hz	Impact rate at 2.4Mpa		35Hz	28Hz	35Hz
Recommended Rotation speed		25-40r/min	Recommended Rotation speed		25-40r/min	25-40r/min	25-40r/min
Air consumption	1.0Mpa	8.0m³/min	Air consumption	1.7Mpa	16.0m³/min	20.0m³/min	16.0m³/min
	1.8Mpa	12.0m³/min		2.4Mpa	22.0m³/min	26.0m³/min	22.0m³/min
	2.4Mpa	16.0m³/min		3.0Mpa	28.0m³/min	35.0m³/min	28.0m³/min

Breakdown design and spare parts list

SN.	Item description	部件名	weight(kg)			
	Hammer		HRC45	HRC55	HRC65	HRC52
1	Circlip	卡簧	0.03	0.04	0.05	0.04
2	Air screen	通气筛	0.35	0.44	0.65	0.44
3	Top sub	接头	6.50	9.65	20.00	9.65
4	"O" ring	O-形圈	0.01	0.02	0.02	0.02
5	Sample tube	采集管	5.10	6.72	12.50	6.75
6	Check Valve	逆止阀	0.25	0.68	0.85	0.68
7	Spring	弹簧	0.04	0.12	0.10	0.12
8	"O" ring	O-形圈	0.01	0.02	0.02	0.02
9	Air distributor	配气座	0.85	1.48	3.50	1.48
10	"O" ring	O-形圈	0.02	0.01	0.02	0.01
11	Internal cylinder	内缸	2.20	4.12	4.20	4.12
12	Piston	活塞	8.50	16.9	24.00	16.9
13	External cylinder	外缸	14.50	19.5	32.00	21.50
14	Guide sleeve	衬套	1.20	0.90	5.50	1.90
15	"O" ring	O-形圈	/	/	/	0.02
16	"O" ring	O-形圈	/	/	/	0.01
17	Stop ring	卡环	/	/	/	0.32
18	Shrout	耐磨套	/	/	/	1.86
19	Drive chuck	卡钎套	3.20	5.65	6.50	4.17
20	Drill bits	钻头	10.50	15.80	31.00	11.05
21	Bit retaining pin	挡珠	0.01	0.15	0.30	/

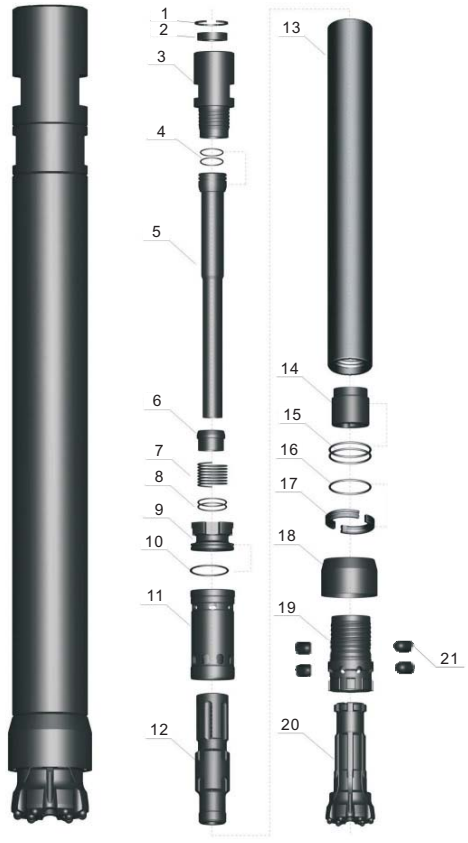

反循环冲击器
Reverse circulation hammers

Technical Data

DTH hammer type		RC004	RC42T
Length (less bit) mm		1252	1165
Weight(excluding bits) kg		52	47
External diameter mm		Φ107	Φ107
Bit shank		RE004	42T
Hole range(mm)		Φ111-127	Φ111-127
Connection thread		3.5"-4"Remet 4"Metzke	3.5"-4"Remet 4"Metzke
Working pressure		1.0-3.0Mpa	1.0-3.0Mpa
Impact rate at 2.4Mpa		30Hz	30Hz
Recommended Rotation speed		25-40r/min	25-40r/min
Air consumption	1.7Mpa	8.0m³/min	8.0m³/min
	2.4Mpa	12.0m³/min	12.0m³/min
	3.0Mpa	16.0m³/min	16.0m³/min

Breakdown design and spare parts list

SN.	Item description	部件名	weight(kg)	
	Hammer		RC004	RC42T
1	"O"Ring	"O"形圈	0.02	0.02
2	"O"Rings	"O"形圈	0.02	0.02
3	Adaptor screen	连接管	1.06	1.06
4	"O"Rings	"O"形圈	0.02	0.02
5	Top sub	接头	7.79	7.79
6	Plunger	逆止阀	0.51	0.51
7	"Y"Ring	"Y"形圈	0.02	0.02
8	Spring	弹簧	0.06	0.06
9	Sample tube upper	上采集管	0.74	0.74
10	"O"Rings	"O"形圈	0.02	0.02
11	"O"Rings	"O"形圈	0.02	0.02
12	Sample tube lower	下采集管	2.38	2.38
13	Spring washers	弹性垫圈	0.17	0.17
14	Distributor	配气座	1.75	1.75
15	"O"Ring	"O"形圈	0.02	0.02
16	Lnner cylinder	内缸	2.45	2.45
17	Piston	活塞	10.45	10.45
18	Piston case	外缸	17.95	17.95
19	Bush drive sub	衬套	1.77	1.52
20	Bit retaining ring	卡环	0.29	0.29
21	"O"Rings	"O"形圈	0.02	0.02
22	Shroud	耐磨套	1.05	1.00
23	Drive sub	卡钎套	3.13	2.40
24	Drill bit	钻头	11.70	8.87

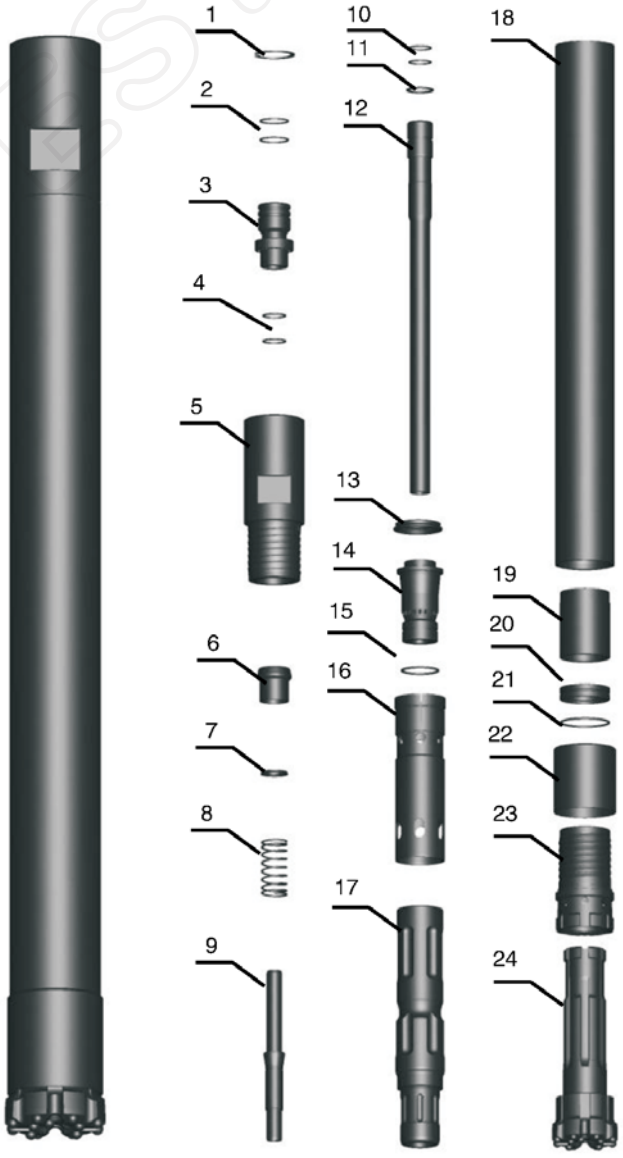

反循环冲击器
Reverse circulation hammers

Technical Data

DTH hammer type		RC42/42R	RC52/52R	RC62/62R
Length (less bit) mm		1120	1225	1320
Weight(excluding bits) kg		48	65	110
External diameter mm		Φ100	Φ124	Φ146
Bit shank		RE004/RE004R	PR52/PR52R	RC62/RC62R
Hole range(mm)		Φ104-120	Φ130-146	Φ152-190
Connection thread		3.5"-4"Remet 4"Metzke	4"-4.5"Remet 4"-4.5"Metzke	Upon the thread of the drill tube 根据客户钻管螺纹确定
Working pressure		1.0-3.0Mpa	1.5-3.5Mpa	1.5-3.5Mpa
Impact rate at 2.4Mpa		30Hz	35Hz	28Hz
Recommended Rotation speed		25-40r/min	25-40r/min	25-40r/min
Air consumption	1.7Mpa	8.0m³/min	16m³/min	20m³/min
	2.4Mpa	12.0m³/min	22m³/min	26m³/min
	3.0Mpa	16.0m³/min	28m³/min	35m³/min

Breakdown design and spare parts list

SN.	Item description	部件名	weight(kg)		
	Hammer		RC42/42R	RC52/52R	RC62/62R
1	"O"Ring	"O"形圈	0.02	0.02	0.03
2	Sample tube	采集管	5.20	6.50	12.5
3	Circlip	卡簧	0.03	0.04	0.04
4	Airscreen top load	过滤筛	0.32	0.42	0.65
5	Top sub	接头	7.75	8.92	20.5
6	Plunger	逆止阀	0.52	0.63	1.2
7	"Y"Ring	"Y"形圈	0.02	0.02	0.03
8	Spring	弹簧	0.06	0.12	0.15
9	"O"Ring	"O"形圈	0.02	0.02	0.03
10	Distributor	配气座	1.20	1.48	2.65
11	"O"Ring	"O"形圈	0.02	0.02	0.03
12	Lnner cylinder	内缸	2.35	4.12	8.34
13	Piston	活塞	10.25	16.9	24.15
14	Piston case	外缸	16.8	19.5	36.8
15	Piston retaining ring	挡圈	0.11	0.13	0.21
16	Bush drive sub	衬套	1.55	1.89	3.50
17	"O"Ring	"O"形圈	0.02	0.02	0.03
18	Bit retaining ring	卡环	0.29	0.31	0.58
19	"O"Ring	"O"形圈	0.02	0.02	0.03
20	Shroud	耐磨套	1.05	1.86	3.46
21	Drive sub	卡钎套	2.45	4.17	7.95
22	Drill bit	钻头	8.85	11.01	20.6
23	Anti-drop retainer	防脱套	1.55	2.35	5.20
24	Anti-drop drive chuck	防脱型卡钎套	2.25	4.02	7.40
25	Anti-drop bit	防脱型钻头	10.45	13.5	23.2

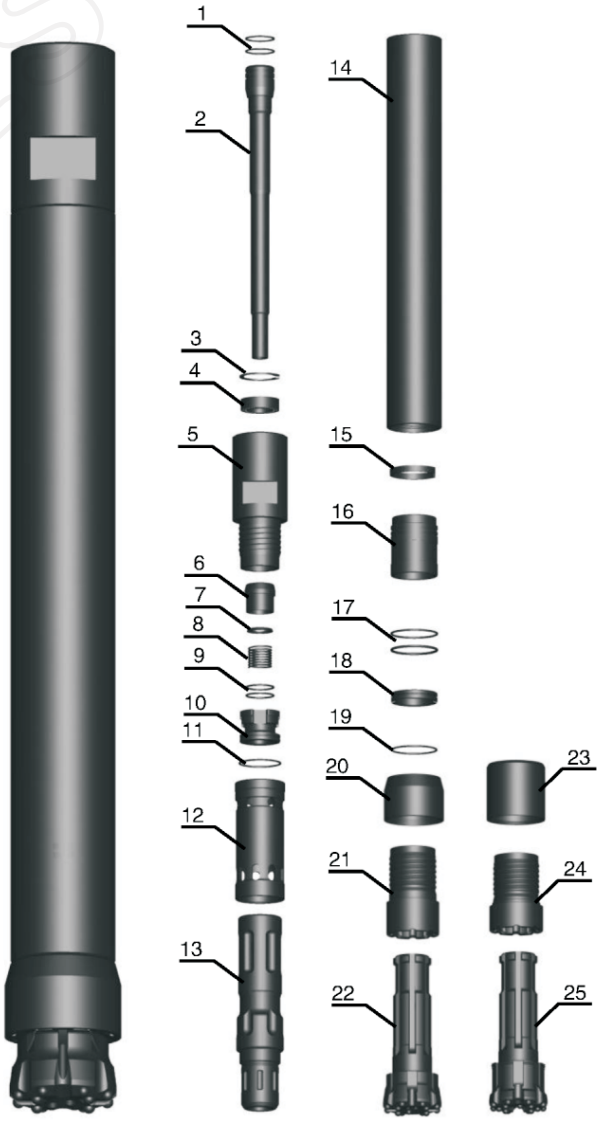

反循环冲击器
Reverse circulation hammers

Technical Data

DTH hammer type		RC82/82R	RC100/100R
Length (less bit) mm		1395	1528
Weight(excluding bits) kg		185	328
External diameter mm		Φ180	Φ240
Bit shank		RC82/RC82R	RC100/RC100R
Hole range(mm)		Φ190-250	Φ250-370
Connection thread		Upon the thread of the drill tube 根据客户钻管螺纹确定	Upon the thread of the drill tube 根据客户钻管螺纹确定
Working pressure		1.5-3.5Mpa	1.5-3.5Mpa
Impact rate at 2.4Mpa		24Hz	20Hz
Recommended Rotation speed		25-40r/min	15-20r/min
Air consumption	1.7Mpa	28m^3/min	36m^3/min
	2.4Mpa	38m^3/min	48m^3/min
	3.0Mpa	52m^3/min	65m^3/min

Breakdown design and spare parts list

SN.	Item description	部件名	weight(kg)	
	Hammer		RC82/82R	RC100/100R
1	"O"Ring	"O"形圈	0.04	0.05
2	Sample tube	采集管	20.5	49.85
3	Circlip	卡簧	0.08	0.12
4	Airscreen top load	过滤筛	1.15	2.25
5	Top sub	接头	32.0	59.5
6	Plunger	逆止阀	2.25	3.40
7	"Y"Ring	"Y"形圈	0.04	0.05
8	Spring	弹簧	0.25	0.48
9	"O"Ring	"O"形圈	0.04	0.05
10	Distributor	配气座	4.25	8.6
11	"O"Ring	"O"形圈	0.04	0.05
12	Lnner cylinder	内缸	16.15	30.9
13	Piston	活塞	38.5	75.6
14	Piston case	外缸	61.3	105.5
15	Piston retaining ring	挡圈	0.45	1.15
16	Bush drive sub	衬套	6.95	11.5
17	"O"Ring	"O"形圈	0.04	0.05
18	Bit retaining ring	卡环	1.20	2.05
19	"O"Ring	"O"形圈	0.04	0.05
20	Shroud	耐磨套	6.95	14.2
21	Drive sub	卡钎套	15.4	30.45
22	Drill bit	钻头	38.6	82.5
23	Anti-drop retainer	防脱套	9.53	19.5
24	Anti-drop drive chuck	防脱型卡钎套	15.2	29.5
25	Anti-drop bit	防脱型钻头	42.8	91.4

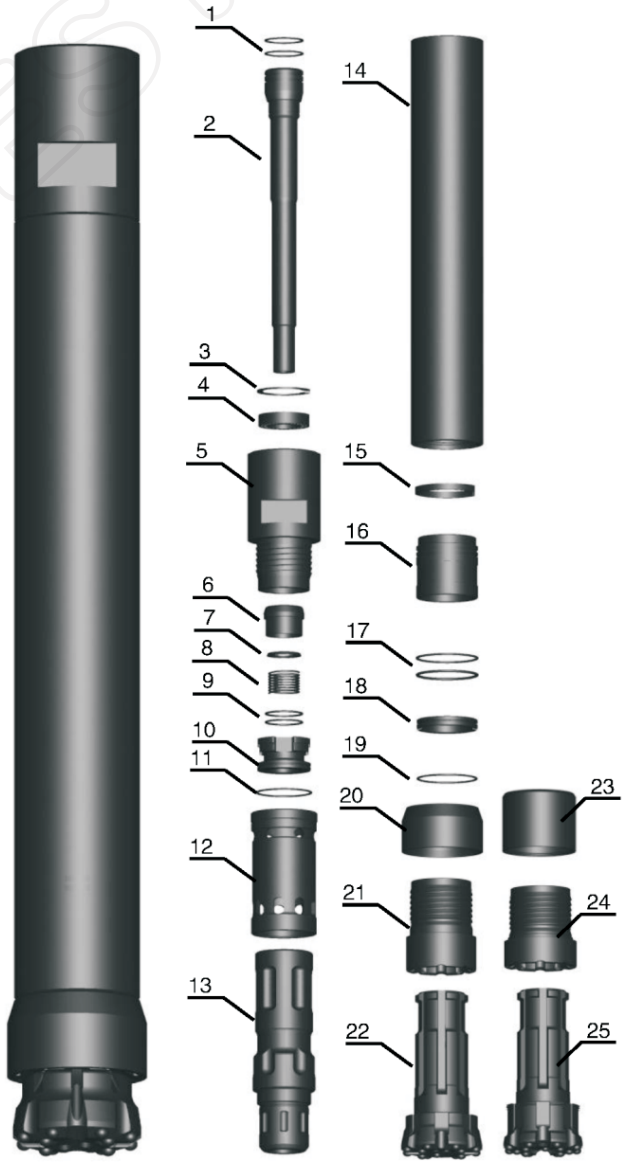

反循环冲击器
Reverse circulation hammers

Technical Data

DTH hammer type		RC542	RC543
Length (less bit) mm		1191	1191
Weight(excluding bits) kg		57	62
External diameter mm		Φ109.5	Φ116
Bit shank		RE542	RE542
Hole range(mm)		Φ113-130	Φ120-135
Connection thread		3.5"- 4"Remet 4"Metzke	3.5"- 4"Remet 4"Metzke
Working pressure		1.0-3.0Mpa	1.5-3.5Mpa
Impact rate at 2.4Mpa		30Hz	35Hz
Recommended Rotation speed		25-40r/min	25-40r/min
Air consumption	1.7Mpa	12.0m³/min	12.0m³/min
	2.4Mpa	18.0m³/min	18.0m³/min
	3.0Mpa	26.0m³/min	26.0m³/min

Breakdown design and spare parts list

SN.	Item description	部件名	weight(kg)	
	Hammer		RC542	RC543
1	Circlip	卡簧	0.04	0.04
2	Adaptor screen	连接管	2.55	2.55
3	"O" ring	"O"形圈	0.02	0.02
4	Top sub	接头	8.52	8.52
5	Sample tube	采集管	3.05	3.50
6	"O" ring	"O"形圈	0.02	0.02
7	Internal circlip	卡簧	0.04	0.04
8	Airscreen	过滤板	0.03	0.02
9	Distributor nozzle	通气筛	0.56	0.56
10	"O" ring	"O"形圈	0.02	0.02
11	Plunger	逆止阀	0.48	0.50
12	"Y" Ring	"Y"形圈	0.02	0.02
13	Spring	弹簧	0.12	0.08
14	Mount sample tube	限位轴套	0.86	0.86
15	"O" ring	"O"形圈	0.02	0.02
16	Internal cylinder	内缸	6.96	7.26
17	"O" ring	"O"形圈	0.02	0.02
18	Piston	活塞	11.64	11.64
19	Piston case	外缸	15.16	19.17
20	Bush drive sub	衬套	2.35	2.35
21	"O" ring	"O"形圈	0.02	0.02
22	Piston retaining ring	弹性挡圈	0.04	0.05
23	Bit retaining ring	卡环	0.26	0.26
24	"O" ring	"O"形圈	0.02	0.02
25	Shrout	耐磨套	2.21	2.21
26	Drive chuck	卡钎套	2.94	2.94
27	Drill bits	钻头	10.96	10.96

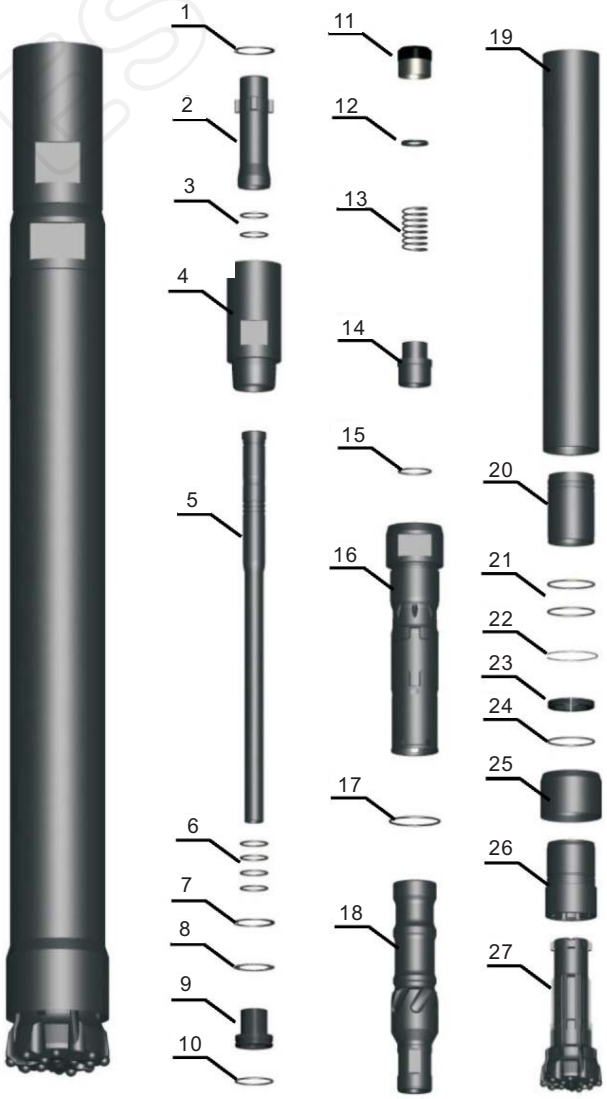

反循环冲击器
Reverse circulation hammers

Technical Data

DTH hammer type		RC545	RC547
Length (less bit) mm		1261	1270
Weight(excluding bits) kg		65	71
External diameter mm		Φ117.5	Φ124.5
Bit shank		RE545	RE547
Hole range(mm)		Φ122-135	Φ130-146
Connection thread		4"- 4.5"Remet 4"- 4.5"Metzke	4.5"Remet 4.5"Metzke
Working pressure		1.5-3.5Mpa	1.5-3.5Mpa
Impact rate at 2.4Mpa		35Hz	35Hz
Recommended Rotation speed		25-40r/min	25-40r/min
Air consumption	1.7Mpa	16.0m³/min	16.0m³/min
	2.4Mpa	22.0m³/min	22.0m³/min
	3.0Mpa	28.0m³/min	28.0m³/min

Breakdown design and spare parts list

SN.	Item description	部件名	weight(kg)	
	Hammer		RC545	RC547
1	Circlip	卡簧	0.04	0.04
2	"O" ring	“O”形圈	0.02	0.02
3	Adaptor screen	连接管	2.95	2.95
4	"O" ring	“O”形圈	0.02	0.02
5	Top sub	接头	6.98	7.38
6	Sample tube	采集管	4.61	4.61
7	"O" ring	“O”形圈	0.02	0.02
8	Internal circlip	卡簧	0.04	0.04
9	Airscreen	过滤板	0.02	0.02
10	Distributor nozzle	通气筛	0.48	0.48
11	"O" ring	“O”形圈	0.02	0.02
12	Plunger	逆止阀	0.53	0.53
13	“Y” Ring	“Y”形圈	0.02	0.02
14	Spring	弹簧	0.12	0.12
15	Lnner cylinder	内缸接头	7.90	8.43
16	"O" ring	“O”形圈	0.02	0.02
17	Internal cylinder	内缸	2.30	2.54
18	Piston	活塞	15.10	17.08
19	Piston case	外缸	17.20	18.55
20	Bush drive sub	衬套	2.95	3.04
21	"O" ring	“O”形圈	0.02	0.02
22	Piston retaining ring	弹性挡圈	0.04	0.04
23	Bit retaining ring	卡环	0.23	0.23
24	"O" ring	“O”形圈	0.02	0.02
25	Shrout	耐磨套	1.60	1.70
26	Drive chuck	卡钎套	3.41	3.61
27	Drill bits	钻头	12.60	14.30

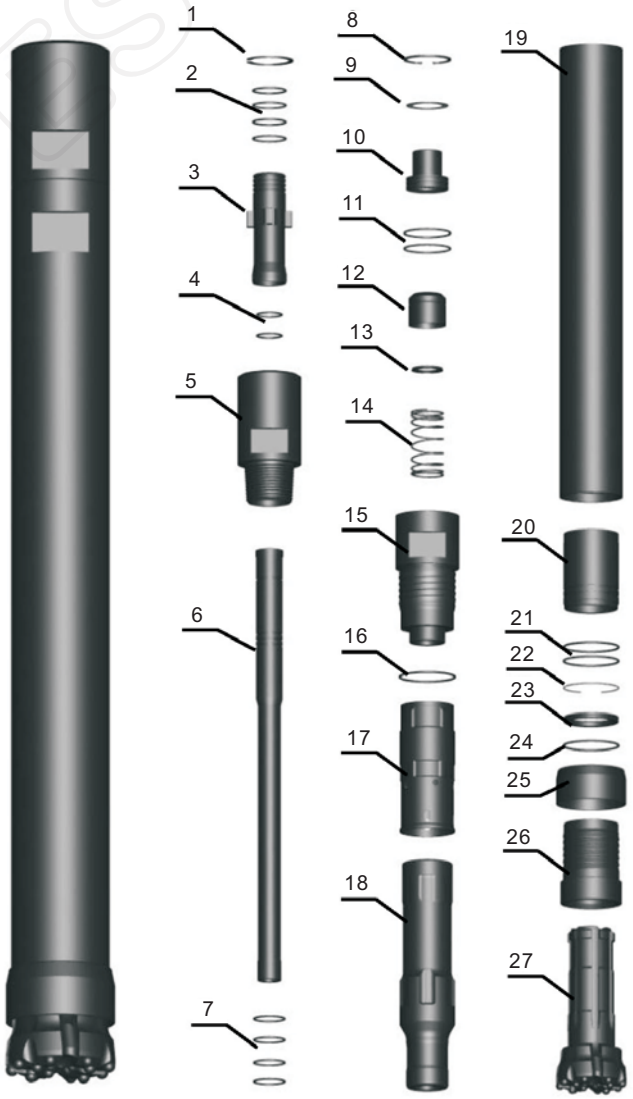

RC052 反循环冲击器
RC052 Reverse circulation hammer

Technical Data

Length (less bit) mm	Weight (excluding bits) kg	External diameter (mm)	Bit shank	Hole range (mm)	Connection thread
1227	68.5	Φ121	PR52	Φ126-142	4"-4.5"Remet 4"-4.5"Metzke

Working pressure	Impact rate at 2.4Mpa	Recommended Rotation speed	Air consumption		
			1.7Mpa	2.4Mpa	3.0Mpa
1.5-3.5Mpa	35Hz	25-40r/min	16m³/min	22m³/min	28m³/min

Breakdown design and spare parts list

SN.	Item description	部件名	weight(kg)
	Hammer		RC052
1	"O"Ring	"O"形圈	0.02
2	Adaptor screen	连接管	2.19
3	Adaptor screen	卡簧	0.04
4	Airscreen top load	过滤筛	0.42
5	Circlip	卡簧	0.03
6	Top sub	接头	8.92
7	Plunger	逆止阀	0.63
8	"Y"Ring	"Y"形圈	0.03
9	Spring	弹簧	0.12
10	Make up ring steel	垫圈	0.10
11	Viton make up ring	橡胶垫圈	0.05
12	"O"Ring	"O"形圈	0.02
13	Distributor	配气座	1.31
14	"O"Ring	"O"形圈	0.02
15	"O"Ring	"O"形圈	0.02
16	Sample tube	采集管	4. 52
17	"O"Ring	"O"形圈	0.02
18	Mount sample tube	限位轴套	0.80
19	Lnner cylinder	内缸	7.39
20	Piston	活塞	14.63
21	Piston case	外缸	18.86
22	Piston retaining ring	挡圈	0.13
23	Bush drive sub	衬套	1.89
24	"O"Ring	"O"形圈	0.02
25	"O"Ring	"O"形圈	0. 02
26	Bit retaining ring	卡环	0. 31
27	"O"Ring	"O"形圈	0. 02
28	Shroud	耐磨套	1. 86
29	Drive sub	卡钎套	4. 17
30	Drill bit	钻头	11. 01

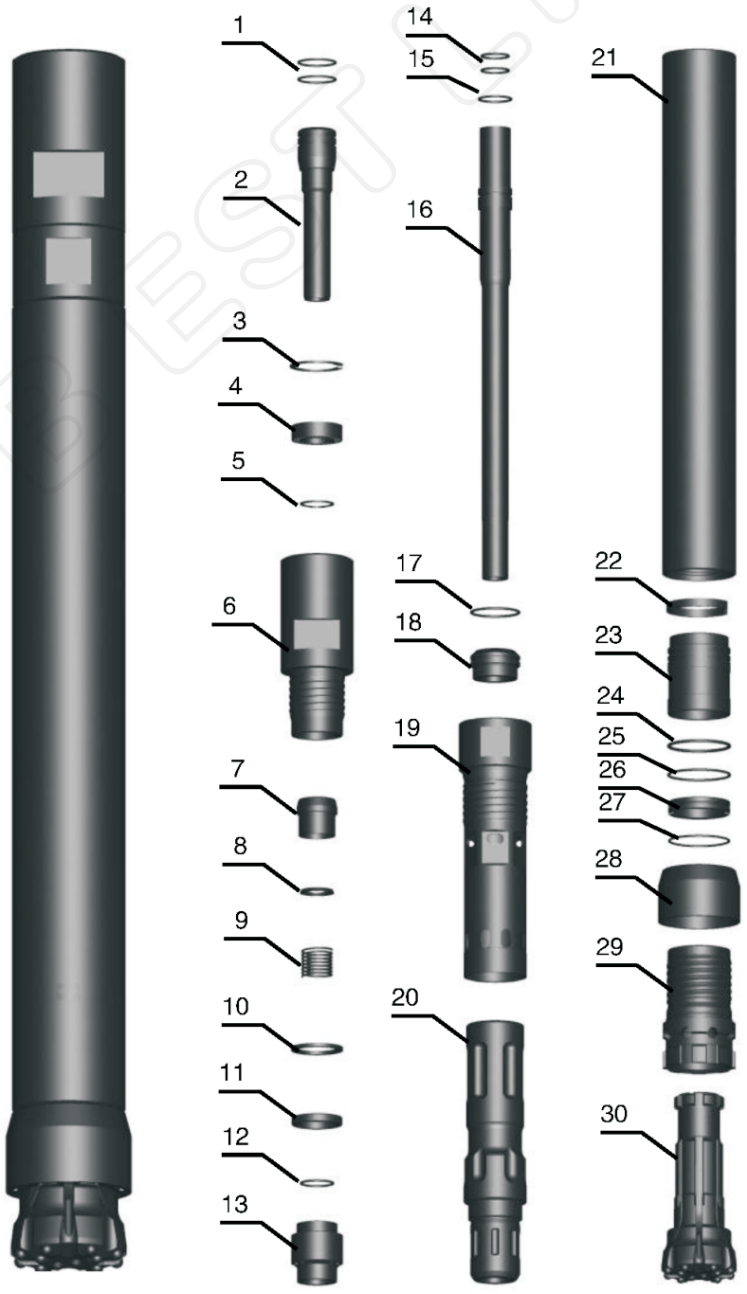

RC054 反循环冲击器
RC054 Reverse circulation hammer

Technical Data

Length (less bit) mm	Weight (excluding bits) kg	External diameter (mm)	Bit shank	Hole range (mm)	Connection thread
1294	84.5	Φ130	PR54	Φ135-150	4.5"Remet 4.5"Metzke

Working pressure	Impact rate at 2.4Mpa	Recommended Rotation speed	Air consumption		
			1.7Mpa	2.4Mpa	3.0Mpa
1.5-3.5Mpa	35Hz	25-40r/min	16m³/min	22m³/min	28m³/min

Breakdown design and spare parts list

SN.	Item description	部件名	weight(kg)
	Hammer		RC054
1	Top sub	接头	11.61
2	"O"Ring	"O"形圈	0.02
3	Adaptor screen	连接管	2.35
4	Air screen	过滤筛	0.37
5	"O"Ring	"O"形圈	7.79
6	Circlip	卡簧	0.04
7	Plunger	逆止阀	0.58
8	"Y"Ring	"Y"形圈	0.02
9	Spring	弹簧	0.12
10	Make up ring steel	垫圈	0.14
11	Viton make up ring	橡胶垫圈	0.06
12	Distributor	配气座	1.54
13	"O"Ring	"O"形圈	0.02
14	"O"Ring	"O"形圈	0.02
15	"O"Ring	"O"形圈	0.02
16	Sample tube	采集管	6.47
17	"O"Ring	"O"形圈	0.02
18	Mount sample tube	限位轴套	1.02
19	Lnner cylinder	内缸	8.54
20	Piston	活塞	17.20
21	Piston case	外缸	23.44
22	Piston retaining ring	挡圈	0.20
23	Bush drive sub	衬套	2.53
24	"O"Ring	"O"形圈	0.02
25	"O"Ring	"O"形圈	0.02
26	Bit retaining ring	卡环	0.43
27	"O"Ring	"O"形圈	0.02
28	Shroud	耐磨套	2.35
29	Drive sub	卡钎套	4.90
30	Drill bit	钻头	18.33

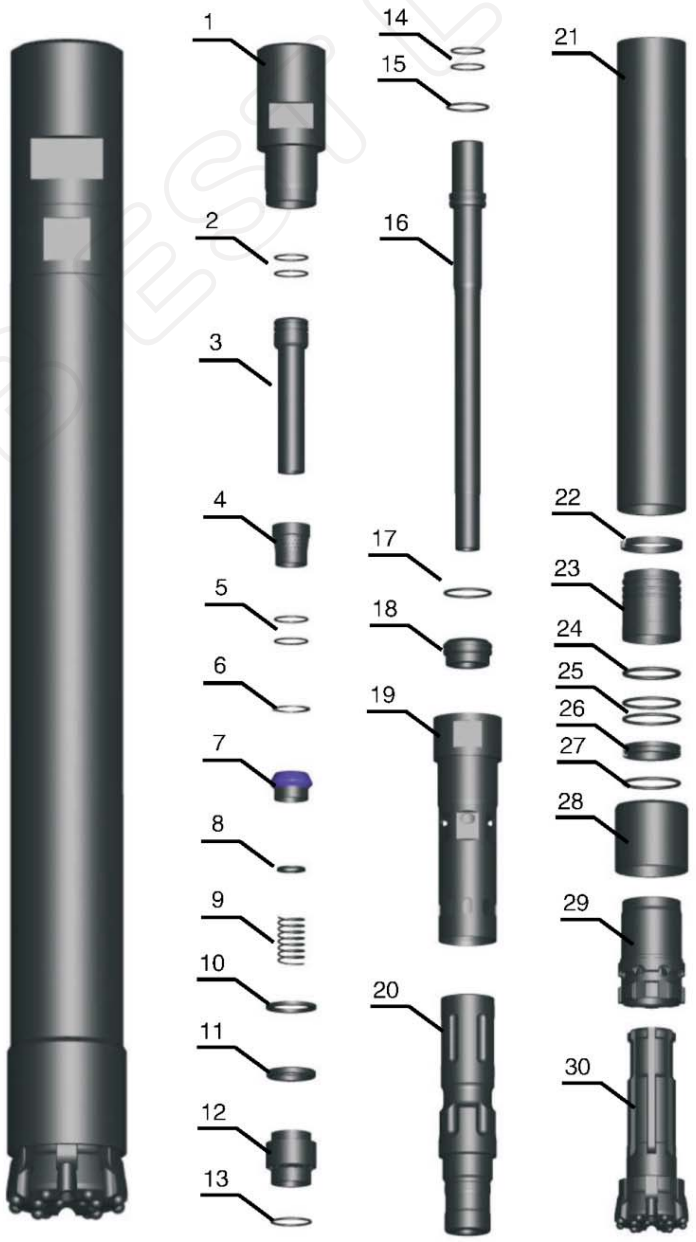

ZHENGZHOU JIANGHUAN DRILLING

RC5456 反循环冲击器
RC5456 Reverse circulation hammer

Technical Data

Length (less bit) mm	Weight (excluding bits) kg	External diameter (mm)	Bit shank	Hole range (mm)	Connection thread
1362	90.0	Φ132	MX5456	Φ135-150	4.5"Remet 4.5"Metzke

Working pressure	Impact rate at 2.4Mpa	Recommended Rotation speed	Air consumption		
			1.7Mpa	2.4Mpa	3.0Mpa
1.5-3.5Mpa	35Hz	25-40r/min	18m³/min	24m³/min	32m³/min

Breakdown design and spare parts list

SN.	Item description	部件名	weight(kg)
	Hammer		RC5456
1	Adaptor screen	连接管	2.35
2	"O"Ring	"O"形圈	0.02
3	Top sub	后接头	9.72
4	"O"Ring	"O"形圈	0.02
5	Sample tube upper	上采集管	1.45
6	"O"Ring	"O"形圈	0.02
7	Airscreen top load	过滤筛	0.24
8	Top sub	接头	13.88
9	Plunger	逆止阀	0.62
10	"Y"Ring	"Y"形圈	0.02
11	Spring	弹簧	0.12
12	Make up ring steel	垫圈	0.30
13	Spring washers	弹性垫圈	0.06
14	Spring washers	通气阀	0.61
15	Sample tube	采集管	6.26
16	"O"Ring	"O"形圈	0.02
17	Distributor	配气座	1.95
18	"O"Ring	"O"形圈	0.02
19	"O"Ring	"O"形圈	0.02
20	Lnner cylinder	内缸	3.17
21	Retaining ring	内缸挡圈	0.17
22	"O"Ring	"O"形圈	0.02
23	Piston	活塞	18.25
24	Piston case	外缸	22.95
25	Piston retaining ring	弹性挡圈	0.11
26	Bush drive sub	衬套	1.17
27	"O"Ring	"O"形圈	0.02
28	Drive sub	卡钎套	5.57
29	Stopper pin	钻头挡珠	0.60
30	Drill bit	钻头	19.36

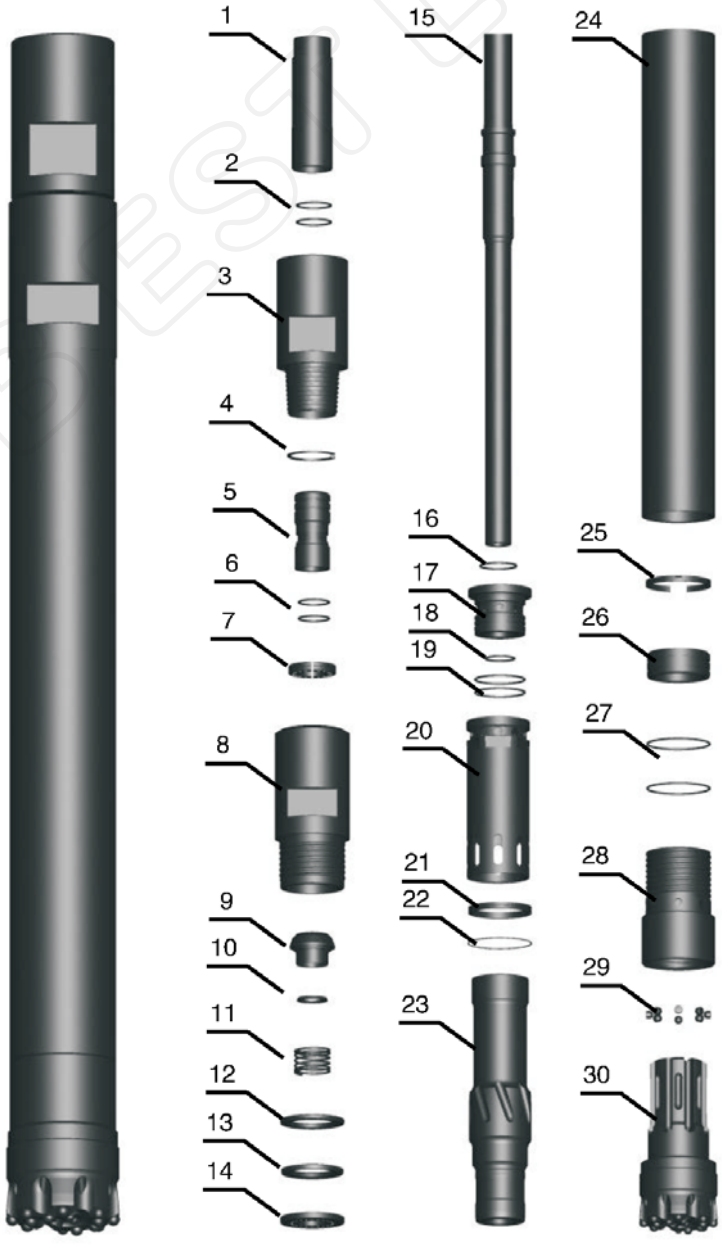

RC040 反循环冲击器
RC040 Reverse circulation hammer

Technical Data

Length (less bit) mm	Weight (excluding bits) kg	External diameter (mm)	Bit shank	Hole range (mm)	Connection thread	
1362	80.5	Φ120.5	PR40	Φ124-142	3.5"-4.5"Remet 3.5"-4.5"Metzke	
Working pressure	Impact rate at 2.4Mpa	Recommended Rotation speed		Air consumption		
				1.7Mpa	2.4Mpa	3.0Mpa
1.5-3.5Mpa	35Hz	25-40r/min		16m³/min	22m³/min	28m³/min

Breakdown design and spare parts list

SN.	Item description	部件名	weight(kg)
	Hammer		RC040
1	Circlip	卡簧	0.04
2	Adaptor screen	连接管	1.51
3	"O"Ring	"O"形圈	0.02
4	Top sub	过渡接头	5.96
5	Sample tube upper	上采集管	1.33
6	Top sub	接头	9.81
7	Airscreen bottom load	过滤筛	0.27
8	"O"Ring	"O"形圈	0.02
9	Circlip	卡簧	0.03
10	Plunger	逆止阀	0.63
11	"Y"Ring	"Y"形圈	0.02
12	Spring	弹簧	0.12
13	Make up ring steel	垫圈	0.09
14	Viton make up ring	橡胶垫圈	0.06
15	"O"Ring	"O"形圈	0.02
16	Distributor	配气座	1.34
17	"O"Ring	"O"形圈	0.02
18	Sample tube lower	下采集管	4.32
19	"O"Ring	"O"形圈	0.02
20	Mount sample tube	限位轴套	0.97
21	Lnner cylinder	内缸	7.69
22	Piston	活塞	13.63
23	Piston case	外缸	24.14
24	Piston retaining ring	挡圈	0.15
25	Bush drive sub	衬套	1.96
26	"O"Ring	"O"形圈	0.02
27	"O"Ring	"O"形圈	0.02
28	Bit retaining ring	卡环	0.31
29	"O"Ring	"O"形圈	0.02
30	Shroud	耐磨套	2.20
31	Drive sub	卡钎套	3.67
32	Drill bit	钻头	15.09

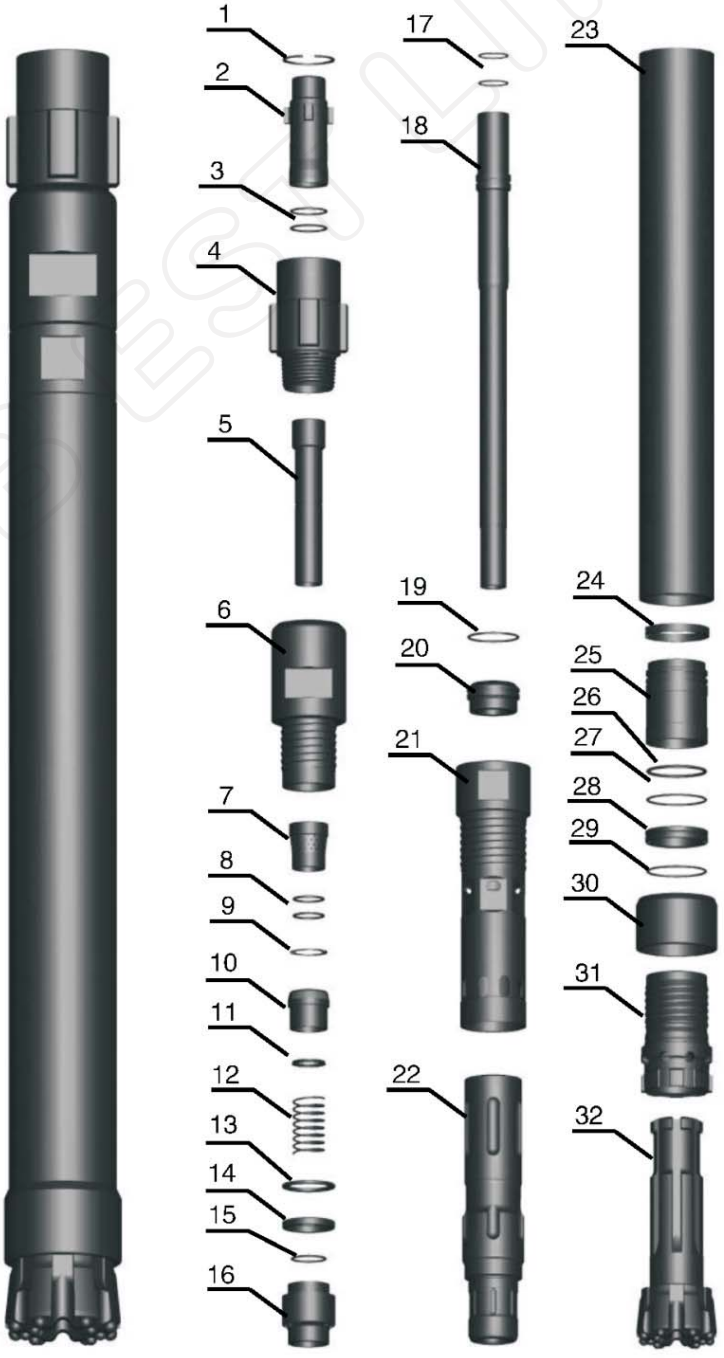

XIAMEN BEST LINK

钻头头部形状选择
Bit face shape selection

	中心下陷型 采用低—中风压钻凿软—中硬以及有裂缝的岩层时，为了获得很快的凿岩速度和较少炮孔偏斜率，通常采用这种头部形状。 Drop Center Bit For high penetration rates in soft to medium hard and fissured rock formations. Low to medium air pressures. Maximum hole deviation control.
	凹面型 这种头部形状适用于所有岩层，特别是在中硬和岩性均匀的岩层中使用效果最好。炮孔偏离度小，排渣效果好。 Concave Face The all–round application bit face specifically for medium hard and homogenerous rock formations. Good hole deviation control and good flushing capacity.
	凸面型 这种形状适应于低—中风压时钻凿软—中硬岩层，钻头钢体不易磨蚀。其特点是边齿承载较低，磨损不严重，钻岩速度快，但炮孔偏差难以控制。 Convex Face For high penetration rates in soft to medium–hard with low to medium air pressures. It is the most resistance to steel wash, and may reduce the load and wear on the gauge buttons, but poor hole deviation control.
	双边齿型 这种双边齿型头部适应于高风压时钻凿很坚硬的岩层。此时钻速快，钻头体磨损不严重。 Double Gauge Face This kind of face shape is suitable for fast penetration rates in medium to hard rock formations. Designed for high air pressures and good resistance to steel wash step gauge bit.
	平面型 这种平面型头部适应于高风压时钻凿很坚硬岩层以及磨蚀性强的岩层。此时，钻速较快，钻体磨蚀较少。 Flat Face Bit This kind of face shape is suitable for hard to very hard and abrasive rock formations in applications with high air pressures. Good penetration rates an resistance to steel wash.

技术参数 Technical Data

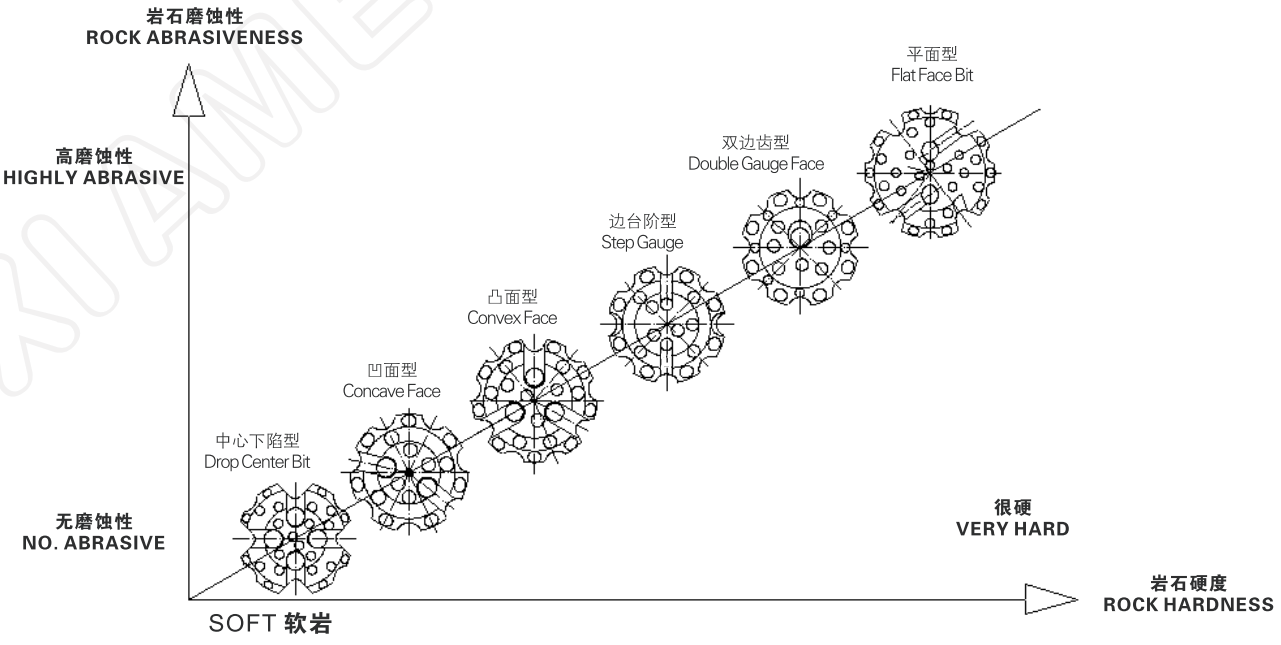

XIAMEN BESTLINK

硬质合金齿形状选择
Carbide button shape selection

合金设计 Button type	
	球　齿 主要用作潜孔钻头边齿，适用于磨蚀性强、非常坚硬的岩石。 Domed / Round Button Domed /Round Buttons are usually used as gauge buttons of DTH Bits, suitable for very abrasive and very hard formations.
	抛物线齿 主要用作潜孔钻头的边齿和中齿，适用于磨蚀性中等、比较硬的岩石。 Parabolic/Semi–Ballistic Buttons Parabolic Buttons are usually used as gauge buttons and front buttons of DTH Bits, suitable for medium abrasive and hard formations.
	弹头齿 主要用作潜孔钻头的中齿，适用于磨蚀性中等、硬度中等的岩石。岩石比较软的情况下也可以做边齿。 Ballistic Button Ballistic Buttons are usually used as front buttons of DTH Bits, suitable for medium abrasive and medium hard formations. They can also be used as gauge buttons if the rock is soft.
	尖　齿 主要用作潜孔钻头的中齿，适用于高钻速、低断齿率的软岩层。 Sharp Button Sharp Buttons are usually used as front buttons of DTH bits for soft formations,suitable for high rotation speed and low bit broken rate sofe rock.
	平头齿 主要用作潜孔钻头的边保护齿，减小钻头体表面的磨损。 Flat Button Flat buttons are usually used as protection buttons to reduce wear on rubbing surfaces of DTH Bits.

XIAMEN BESTLINK

1–2 英寸中风压潜孔钻头 1"-2"Middle air pressure DTH bits

钻头系列 Drill Bit	钻头直径 Bit Dia.（mm）	排气孔数量 NO.Air Holes	边齿 Gauge Buttons	中齿 Front Buttons	重量 Weight（Kg）	编号 Part No.
BR1 	64	2	6×φ10	3×φ10	2.6	HBR1-64
	70	2	6×φ12	4×φ9	2.8	HBR1-70
	76	2	6×φ12	5×φ10	3.2	HBR1-76
BR2 	76	2	6×φ12	5×φ10	3.6	HBR2-76
	80	2	6×φ13	5×φ10	4.0	HBR2-80
	90	2	6×φ13	6×φ10	4.2	HBR2-90
HD25 	76	2	6×φ13	5×φ10	3.6	HD25-76
	82	2	6×φ14	4×φ11	4.0	HD25-82
	90	2	8×φ12	5×φ12	4.2	HD25-90

3英寸高风压潜孔钻头 3"High air pressure DTH bits

Drill Bit	Bit Dia.（mm）	NO.Air Holes	Gauge Buttons	Front Buttons	Weight（Kg）	Part No.
COP32 	85	2	6×φ13	4×φ12	4.2	COP32-85
	90	2	6×φ14	4×φ12	4.5	COP32-90
	95	2	6×φ14	4×φ13	4.7	COP32-95
	100	2	6×φ14	5×φ12	5.0	COP32-100
	105	2	6×φ14	5×φ13	5.3	COP32-105
BR3 	85	2	6×φ13	4×φ12	3.8	BR3-85
	90	2	6×φ14	4×φ12	4.0	BR3-90
	95	2	6×φ14	5×φ12	4.3	BR3-95
	100	2	8×φ13	6×φ13	4.8	BR3-100
	105	2	8×φ13	6×φ13	5.2	BR3-105
HD35(IR3.5,Cop34) 	85	2	6×φ13	4×φ12	4.2	HD35-85
	90	2	6×φ14	4×φ12	4.5	HD35-90
	95	2	6×φ14	4×φ13	4.8	HD35-95
	100	2	6×φ14	5×φ12	5.0	HD35-100
	105	2	6×φ14	5×φ13	5.5	HD35-105
QL30(COP34) 	85	2	6×φ13	4×φ12	4.5	QL30-85
	90	2	6×φ14	4×φ12	4.7	QL30-90
	95	2	6×φ14	4×φ13	4.9	QL30-95
	100	2	6×φ14	5×φ12	5.0	QL30-100
	105	2	6×φ14	5×φ13	5.5	QL30-105

SHANGHAI BEST TOOLS

4英寸高风压潜孔钻头
4"High air pressure DTH bits

钻头系列 Drill Bit	钻头直径 Bit Dia.（mm）	排气孔数量 NO.Air Holes	边齿 Gauge Buttons	中齿 Front Buttons	重量 Weight（Kg）	编号 Part No.
HD45(DHD340A、COP44) 	105	2	6×φ14	5×φ13	8.5	HD45-105
	110	2	7×φ14	6×φ13	8.8	HD45-110
	115	2	7×φ14	6×φ13	9.0	HD45-115
	120	2	8×φ14	7×φ13	9.8	HD45-120
	127	2	8×φ14	7×φ13	11.0	HD45-127
SD4 	105	2	6×φ14	5×φ13	9.0	SD4-105
	110	2	7×φ14	6×φ13	9.5	SD4-110
	115	2	7×φ14	6×φ13	9.8	SD4-115
	120	2	8×φ14	7×φ13	11.5	SD4-120
	127	2	8×φ14	7×φ13	12.3	SD4-127
QL40 	105	2	6×φ14	5×φ13	9.0	QL40-105
	110	2	7×φ14	6×φ13	9.2	QL40-110
	115	2	7×φ14	6×φ13	9.5	QL40-115
	120	2	8×φ14	7×φ13	10.3	QL40-120
	127	2	8×φ14	7×φ13	11.5	QL40-127
HM4 	105	2	6×φ14	5×φ13	6.0	HM4-105
	110	2	7×φ14	6×φ13	6.2	HM4-110
	115	2	7×φ14	6×φ13	6.6	HM4-115
	120	2	8×φ14	7×φ13	7.0	HM4-120
	127	2	8×φ14	7×φ13	7.4	HM4-127

我们可根据客户对钻头直径大小、排气孔数量、合金齿形状和钻头头部形状的不同要求分别设计制造。

We can design and manufacture according to customer's requirement of the Bit Dia, No.of air holes, carbide button shape and the face shape.

XIAMEN BEST UNION

5英寸高风压潜孔钻头
5"High air pressure DTH bits

钻头系列 Drill Bit	钻头直径 Bit Dia.（mm）	排气孔数量 NO.Air Holes	边齿 Gauge Buttons	中齿 Front Buttons	重量 Weight（Kg）	编号 Part No.
HD55(DHD350R、COP54) 	135	2	7×φ18	6×φ14	15.0	HD55-135
	140	2	7×φ18	7×φ14	16.0	HD55-140
	146	2	7×φ18	7×φ14	17	HD55-146
	152	2	8×φ18	8×φ14	17.5	HD55-152
	165	2	8×φ18	8×φ16	18.5	HD55-165
SD5 	135	2	7×φ16	6×φ14	15.5	SD5-135
	140	2	7×φ18	7×φ14	16	SD5-140
	146	2	8×φ18	7×φ14	16.5	SD5-146
	152	2	8×φ18	8×φ14	17	SD5-152
	165	2	8×φ18	8×φ16	18	SD5-165
QL50 	135	2	7×φ18	6×φ14	15.5	QL50-135
	140	2	7×φ18	7×φ14	16	QL50-140
	146	2	7×φ18	7×φ14	16.5	QL50-146
	152	2	8×φ18	8×φ14	17	QL50-152
	165	2	8×φ18	8×φ16	18	QL50-165
HM5 	135	2	7×φ18	6×φ14	12.5	HM5-135
	140	2	7×φ18	7×φ14	13.5	HM5-140
	146	2	7×φ18	7×φ14	14	HM5-146
	152	2	8×φ18	8×φ14	14.4	HM5-152
	165	2	8×φ18	8×φ16	15	HM5-165

我们可根据客户对钻头直径大小、排气孔数量、合金齿形状和钻头头部形状的不同要求分别设计制造。

We can design and manufacture according to customer's requirement of the Bit Dia, No.of air holes, carbide button shape and the face shape.

XIAMEN BEST UNION

6英寸高风压潜孔钻头
6"High air pressure DTH bits

钻头系列 Drill Bit	钻头直径 Bit Dia.（mm）	排气孔数量 NO.Air Holes	边齿 Gauge Buttons	中齿 Front Buttons	重量 Weight（Kg）	编号 Part No.
HD65(DHD360、COP64) 	152	2	8×φ18	7×φ16	22.0	HD65-152
	165	2	8×φ18	8×φ16	26.0	HD65-165
	171	2	8×φ18	8×φ16	27.0	HD65-171
	190	3	9×φ18	9×φ16	28.5	HD65-190
	203	3	9×φ18	11×φ16	29.5	HD65-203
SD6 	152	2	8×φ18	7×φ16	26.0	SD6-152
	165	2	8×φ18	8×φ16	27.0	SD6-165
	171	2	8×φ18	8×φ18	29.0	SD6-171
	190	3	9×φ18	9×φ16	32.0	SD6-190
	203	3	9×φ18	11×φ16	34.0	SD6-203
QL60 	152	2	8×φ16	7×φ16	24.0	QL60-152
	165	2	8×φ18	8×φ16	25.0	QL60-165
	171	2	8×φ18	8×φ16	27.0	QL60-171
	190	3	9×φ18	9×φ16	29.0	QL60-190
	203	3	9×φ18	11×φ16	33.0	QL60-203
HM6 	152	2	8×φ18	7×φ16	22.0	HM6-152
	165	2	8×φ18	8×φ16	23.0	HM6-165
	171	2	8×φ18	8×φ16	24.0	HM6-171
	190	3	9×φ18	9×φ16	25.0	HM6-190
	203	3	9×φ18	11×φ16	28.0	HM6-203

我们可根据客户对钻头直径大小、排气孔数量、合金齿形状和钻头头部形状的不同要求分别设计制造。

We can design and manufacture according to customer's requirement of the Bit Dia, No.of air holes, carbide button shape and the face shape.

XIAMEN BEST UNION

8英寸高风压潜孔钻头
8"High air pressure DTH bits

钻头系列 Drill Bit	钻头直径 Bit Dia.（mm）	排气孔数量 NO.Air Holes	边齿 Gauge Buttons	中齿 Front Buttons	重量 Weight（Kg）	编号 Part No.
HD85(DHD380、COP84) 	203	2	10×φ18	10×φ16	40.0	HD85-203
	216	2	10×φ18	12×φ16	49.0	HD85-216
	241	2	12×φ18	18×φ16	64.0	HD85-241
	254	3	12×φ18	21×φ16	71.0	HD85-254
	305	4	12×φ18	29×φ16	95.0	HD85-305
SD8 	203	2	10×φ18	10×φ16	37.0	SD8-203
	216	2	10×φ18	12×φ16	48.0	SD8-216
	241	2	12×φ18	18×φ16	63.0	SD8-241
	254	3	12×φ18	21×φ16	70.0	SD8-254
	305	4	12×φ18	29×φ16	94.0	SD8-305
QL80 	203	2	10×φ18	10×φ16	35.0	QL80-203
	216	2	10×φ18	12×φ16	49.0	QL80-216
	241	2	12×φ18	18×φ16	64.0	QL80-241
	254	3	12×φ18	21×φ16	71.0	QL80-254
	305	4	12×φ18	29×φ16	95.0	QL80-305
HM8 	203	2	10×φ18	10×φ16	35.0	HM8-203
	216	2	10×φ18	12×φ16	40.0	HM8-216
	241	2	12×φ18	18×φ16	54.0	HM8-241
	254	3	12×φ18	21×φ16	57.0	HM8-254
	305	4	12×φ18	29×φ16	77.0	HM8-305

我们可根据客户对钻头直径大小、排气孔数量、合金齿形状和钻头头部形状的不同要求分别设计制造。

We can design and manufacture according to customer's requirement of the Bit Dia, No.of air holes, carbide button shape and the face shape.

XIAMEN BESTUNS

10英寸高风压潜孔钻头 10"High air pressure DTH bits

Drill Bit	Bit Dia.(mm)	NO.Air Holes	Gauge Buttons	Front Buttons	Weight (Kg)	Part No.
SD10 	254	3	12×φ18	20×φ16	108.0	SD10-254
	305	4	12×φ18	36×φ16	125.0	SD10-305
	311	4	12×φ18	36×φ16	130.0	SD10-311
	318	4	12×φ18	38×φ16	142.0	SD10-318
	330	4	16×φ18	42×φ16	155.0	SD10-330
NUMA100 	254	3	12×φ18	20×φ16	90.0	NUMA100-254
	305	4	12×φ18	36×φ16	102.0	NUMA100-305
	311	4	12×φ18	36×φ16	104.0	NUMA100-311
	318	4	12×φ18	38×φ16	106.0	NUMA100-318
	330	4	14×φ18	42×φ16	112.0	NUMA100-330

12英寸高风压潜孔钻头 12"High air pressure DTH bits

Drill Bit	Bit Dia.(mm)	NO.Air Holes	Gauge Buttons	Front Buttons	Weight (Kg)	Part No.
DHD1120 	305	4	12×φ18	36×φ16	152.0	DHD1120-305
	311	4	12×φ18	36×φ16	157.0	DHD1120-311
	330	4	16×φ18	42×φ16	165.0	DHD1120-330
	356	4	16×φ19	48×φ16	178.0	DHD1120-356
	381	4	16×φ19	48×φ18	198.0	DHD1120-381
SD12 	305	4	12×φ18	36×φ16	156.0	SD12-305
	311	4	12×φ18	36×φ16	168.0	SD12-311
	330	4	16×φ18	42×φ16	180.0	SD12-330
	356	4	16×φ19	48×φ16	191.0	SD12-356
	381	4	16×φ19	48×φ18	200.0	SD12-381
NUMA120 	305	4	12×φ18	36×φ16	152.0	N120-305
	311	4	12×φ18	36×φ16	158.0	N120-311
	330	4	16×φ18	42×φ16	165.0	N120-330
	356	4	16×φ19	48×φ16	178.0	N120-356
	381	4	16×φ19	48×φ18	195.0	N120-381
NUMA125 	305	4	12×φ18	36×φ16	170.0	N125-305
	311	4	12×φ18	36×φ16	173.0	N125-311
	330	4	16×φ18	42×φ16	182.0	N125-330
	356	4	16×φ19	48×φ16	191.0	N125-356
	381	4	16×φ19	48×φ18	200.0	N125-381

水井、建筑桩、油气钻井用大孔径钻头
Big size bits using in water wells,oil,gas and construction drilling

Drill Bit	Bit Dia.（mm）	NO.Air Holes	Gauge Buttons	Front Buttons	Weight（Kg）	Part No.
HD275 	311	3	15×φ18	36×φ16	205	HD275-311
	334	3	18×φ19	44×φ18	216	HD275-334
	356	3	18×φ19	48×φ18	225	HD275-356
	368	4	20×φ19	50×φ18	230	HD275-368
	381	4	20×φ19	54×φ19	236	HD275-381
HD330 	381	4	20×φ19	54×φ18	297	HD330-381
	406	4	20×φ19	58×φ18	311	HD330-406
	431	4	20×φ19	64×φ18	324	HD330-431
	445	4	24×φ20	72×φ18	334	HD330-445
	470	4	24×φ20	80×φ18	347	HD330-470
HD475 	495	4	24×φ20	88×φ18	710	HD475-495
	525	4	24×φ20	100×φ18	760	HD475-525
	580	4	24×φ20	116×φ18	855	HD475-580
	660	4	28×φ20	140×φ19	950	HD475-660
	680	4	28×φ20	144×φ19	968	HD475-680
HD525 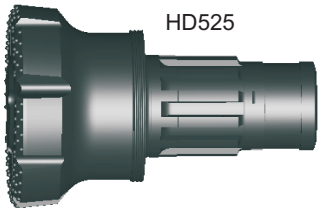	711	4	28×φ20	154×φ19	1455	HD525-711
	762	4	32×φ20	172×φ19	1539	HD525-762
	780	4	32×φ20	180×φ19	1564	HD525-780
	825	4	36×φ20	216×φ19	1625	HD525-825
	998	4	40×φ20	348×φ19	1980	HD525-998

反循环钻头　Reverse circulation drill bit

Drill Bit	Bit Dia.（mm）	NO.Air Holes	Gauge Buttons	Front Buttons	Weight（Kg）	Part No.
HRC 	115	2	8×φ14	8×φ13	14.0	HRC45-115
	140	2	8×φ16	8×φ14	16.5	HRC55-140
	165	2	8×φ18	8×φ16	19.5	HRC65-165
Mic 	133	2	8×φ16	8×φ14	17.5	Mic-133
	140	2	8×φ16	8×φ14	18.0	Mic-140
	146	2	8×φ18	8×φ14	20.0	Mic-146
PR5 	133	2	8×φ16	8×φ14	12.5	PR5-133
	140	2	8×φ16	8×φ14	13.0	PR5-140
	146	2	8×φ18	8×φ14	13.5	PR5-146
PR4 	115	2	8×φ16	8×φ13	14.4	PR4-115
	127	2	8×φ16	8×φ14	15.0	PR4-127
	133	2	8×φ16	8×φ14	15.5	PR4-133

XIAMEN BESTLONG

J系列低风压潜孔钻头 J Series low air pressure DTH bits





凹面型
Concave



平面型
Flat



凸面型
Convex

型号 Type	直径(mm) Dia.	花键齿数 Spline No.	重量 Weight (Kg)
J60C	65	4	2.26
J70C	75	4	2.40
J80B	85	4	3.20
J80B	90	4	3.60
J100B	110	4	5.04
J100B	115	4	5.40
J100B	120	4	6.25
J150B	155	6	14.0
J150B	160	6	15.5
J150B	165	6	22.0
J170B	170	6	24.5
J170B	180	6	28.6
J200B	210	6	43.5
J200B	220	6	45.0

CIR系列低风压潜孔钻头 CIR Series low air pressure DTH bits

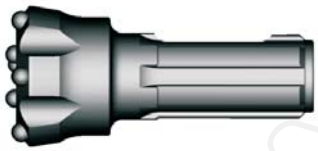



凹面型
Concave



平面型
Flat



凸面型
Convex

型号 Type	直径(mm) Dia.	花键齿数 Spline No.	重量 Weight (Kg)
CIR65	68	6	2.50
CIR70	76	6	3.40
CIR80	83	6	3.45
CIR80X	83	6	3.50
CIR90	90	6	3.50
CIR90	100	6	4.50
CIR90	130	6	9.50
CIR110	110	6	6.40
CIR110	123	6	8.50
CIR100W	110	6	6.50
CIR100W	123	6	8.80
CIR150	155	6	12.0
CIR150A	155	6	12.5
CIR150A	165	6	14.0
CIR170	175	6	15.5
CIR170A	185	6	16.0
CIR200W	200	6	48.0

XIAMEN BEST LINK

偏心钻具工作原理
Eccentric reamer system operating steps

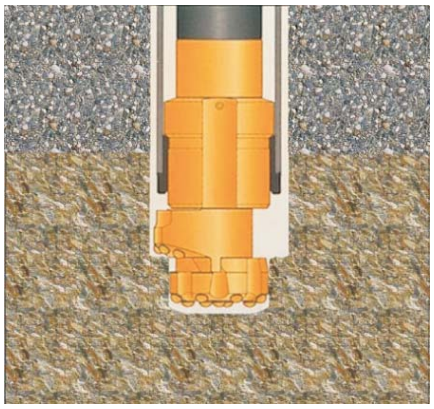	1、凿岩工作开始时，偏心扩孔套沿偏心导向钻头旋出，同时开始扩孔以保证套管和钻进系统同时前进。 When drilling starts, the reamer swings out and reams the pilot–hole wide enough for the casing tube to slide down behind the drill bit assembly.
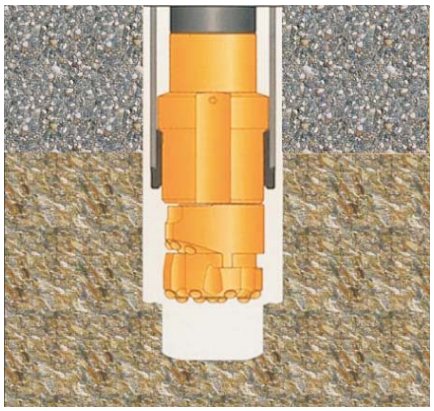	2、跟管钻进到位后，小心地反转，偏心扩孔套旋回，并将偏心钻具系统从套管中拔出。 When the required depth is reached, rotation is reversed carefully, whereupon the reamer swings in, allowing the drill bit assembly to be pulled up through the casing.
	3、将套管向上拔，同时在孔底喷灌砼浆或其它填充物。 Casing tubes that are to be left in the drill hole should be sealed at the bottom of the hole by means of cement grout or some other sealing agent.
	4、在基岩中采用常规钻具钻进以达到所需深度。 Drilling continues to the desired depth in the bedrock using a conventional drilling .

偏心钻具 Eccentric overburden drilling equipment

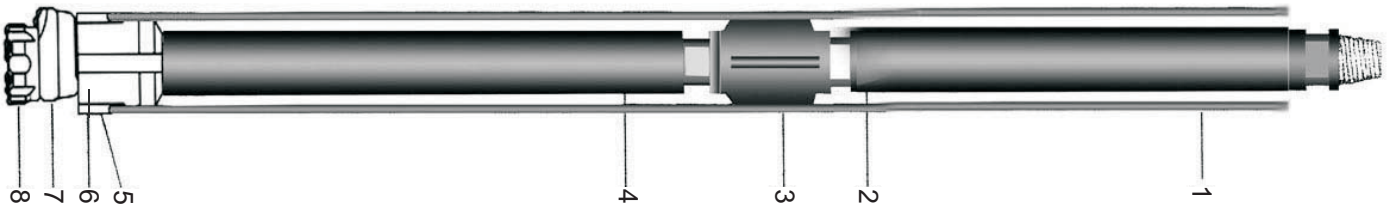

型号 Type	1套管 Casing Tube	2钻管 Drill Pipe	3导向接头 Guide Sleeve	4配用冲击器 DTH-Hammer	5管靴 Casing Shoe	6稳杆器 Guide Device	7偏心扩孔套 Reamer	8偏心导向钻头 Pilot Bit
HOD90	最大外径 Maximum O.D: 115mm 最小内径 Minimum I.D: 102mm	连接螺纹 Connection Thread: API 2 3/8"Reg 外径 O.D:76mm 板手槽厚 Wrench Flats: 65mm	有效长度 Effective length: 174mm	HD35、Cop32、IR3.5、QL30	L3=90mm L4=55mm D3=101mm D4=93mm	L1=35mm L2=138mm D1=92mm D2=100mm	D5=91mm L5=70mm Reaming Diameter: 123mm Reamer has 4× Φ12buttons	D6=90mm L6=59mm Gauge button: 8× Φ12 Face button: 6× Φ10
HOD115	最大外径 Maximum O.D: 142mm 最小内径 Minimum I.D: 128mm	连接螺纹 Connection Thread: API 2 3/8"Reg 外径 O.D:76mm 板手槽厚 Wrench Flats: 65mm	有效长度 Effective length: 174mm	HD45、Cop44、SD4、DHD340A、QL40、HM4	L3=76mm L4=55mm D3=127.5mm D4=117mm	L1=48mm L2=136mm D1=115mm D2=126mm	D5=114mm L5=89mm Reaming Diameter: 152mm Reamer has 5× Φ14buttons	D6=114mm L6=67mm Gauge button: 8× Φ14 Face button: 6× Φ13
HOD140	最大外径 Maximum O.D: 171mm 最小内径 Minimum I.D: 155.6mm	连接螺纹 Connection Thread: API 2 3/8"Reg 外径 O.D:89mm 板手槽厚 Wrench Flats: 65mm	有效长度 Effective length: 205mm	HD55、Cop54、SD5、DHD350R、QL50	L3=90mm L4=63mm D3=155.3mm D4=143mm	L1=55mm L2=160mm D1=141mm D2=154mm	D5=138mm L5=69.5mm Reaming Diameter: 185mm Reamer has 7× Φ14buttons	D6=138mm L6=66.5mm Gauge button: 8× Φ16 Face button: 8× Φ14
HOD165	最大外径 Maximum O.D: 195mm 最小内径 Minimum I.D: 182.6mm	连接螺纹 Connection Thread: API 3 1/2"Reg 外径 O.D:114mm 板手槽厚 Wrench Flats: 95mm	有效长度 Effective length: 225mm	HD65、Cop64、SD6、DHD360、QL60	L3=95mm L4=55mm D3=181.5mm D4=166mm	L1=61.5mm L2=181.5mm D1=165mm D2=178mm	D5=164mm L5=79.5mm Reaming Diameter: 211mm Reamer has 7× Φ14buttons	D6=165mm L6=82.5mm Gauge button: 8× Φ16 Face button: 8× Φ16
HOD190	最大外径 Maximum O.D: 222mm 最小内径 Minimum I.D: 205mm	连接螺纹 Connection Thread: API 3 1/2"Reg 外径 O.D:114mm 板手槽厚 Wrench Flats: 95mm	有效长度 Effective length: 285mm	HD65、Cop64、SD6、DHD360、QL60	L3=110mm L4=70mm D3=204.5mm D4=193mm	L1=62.5mm L2=184.5mm D1=191mm D2=203mm	D5=185.5mm L5=90.2mm Reaming Diameter: 237mm Reamer has 7× Φ16buttons	D6=190mm L6=82mm Gauge button: 9× Φ18 Face button: 9× Φ16
HOD240	最大外径 Maximum O.D: 273mm 最小内径 Minimum I.D: 260.4mm	连接螺纹 Connection Thread: API 3 1/2"Reg 外径 O.D:114mm 板手槽厚 Wrench Flats: 95mm	有效长度 Effective length: 343mm	HD85、Cop84、SD8、DHD380、QL80	L3=110mm L4=65mm D3=259mm D4=241mm	L1=70mm L2=190mm D1=240mm D2=256mm	D5=238mm L5=100mm Reaming Diameter: 308mm Reamer has 14× Φ16buttons	D6=240mm L6=89.5mm Gauge button: 12× Φ16 Face button: 18× Φ16
HOD280	最大外径 Maximum O.D: 324mm 最小内径 Minimum I.D: 305mm	连接螺纹 Connection Thread: API 4 1/2"Reg 外径 O.D:114mm 板手槽厚 Wrench Flats: 95mm	有效长度 Effective length: 305mm	SD10、NUMA100	L3=125mm L4=75mm D3=304mm D4=281mm	L1=97mm L2=254mm D1=280mm D2=303mm	D5=266mm L5=120mm Reaming Diameter: 378mm Reamer has 22× Φ18buttons	D6=280mm L6=135mm Gauge button: 12× Φ18 Face button: 27× Φ16

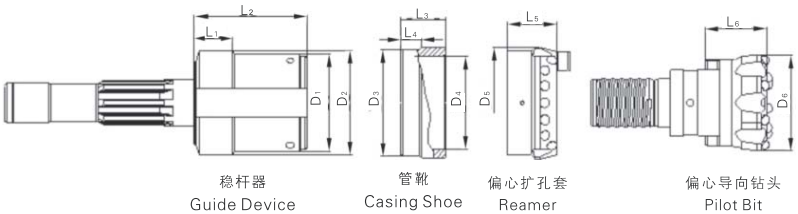



SHANGHAI BESTLONG

对心跟管钻进工作步骤
Symmetric drilling tools with case tube drilling steps

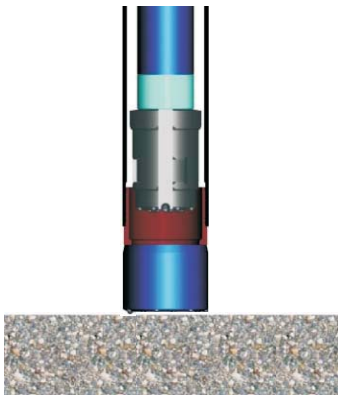

1. 钻孔之前，将环形钻头和管靴组件与套管焊好，然后将导向钻头与环形钻头管靴组件锁好，导向钻头肩部与管靴啮合。

1. Ring bit and casing shoe assembly is welded to casing prior to drilling. Lock the assembly into pilot bit with hammer. The pilot bit's upper shoulder engages the shoulder of the casing shoe.

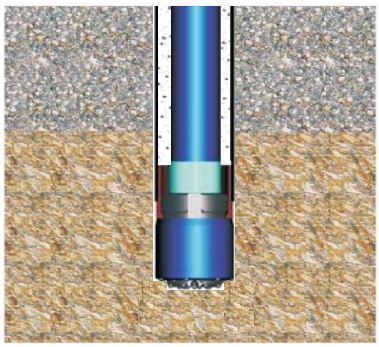

2. 冲击器的冲击能传至导向钻头和环形钻头开始破岩，部分能量带动套管向前。

2. Hammer's percussive energy is transferred through the pilot and ring bits, crushing rock. Part of impact energy advances casing.

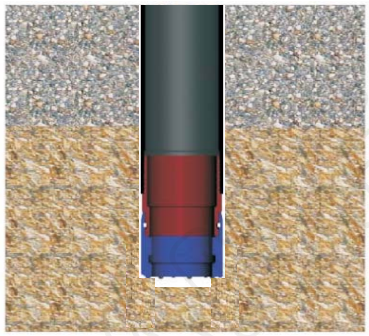

3. 在钻进结束之后，通过轻轻反转让卡口连接解锁而取回钻具。环形钻头留在孔内，当孔进行注浆完毕，套管拔出时，环形钻头一起取出。

3. On completion of drilling and casing, the drill string with pilot bit is retrieved by a slight reverse rotation to unlock the bayonet coupling. The ring bit stays in the hole, and can be recovered only if the casing is retrieved.

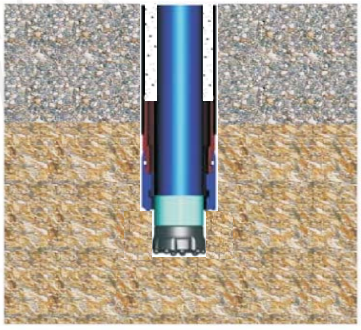

4. 在基岩中，如果需要进一步钻进，将导向钻头换成尺寸合适的标准钻头。

4.If further drilling is required on the bedrock, the pilot bit is simply replaced by an appropriate size of standard DTH bit.

对心扩孔钻具
Symmetric overburden drilling equipment

产品展示 Products	产品型号 Product Type	套管外径 Casing OD	套管最大壁厚 Casing wall max	环形钻头内径 Ring bit ID	环形钻头外径 Ring bit OD	导向钻头外径 Pilot bit OD	冲击器型号 Hammer
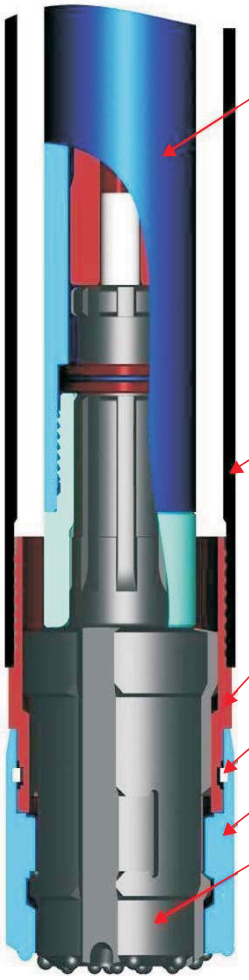	HSOD114	114.3	6/10	91/78	128/124	100/92.5	HD35
	HSOD127	126.7	7	99	140	110	HD35
	HSOD140	139.7	7/10	116/94	154/150	124/117.5	HD45、HQL4
	HSOD168	168.3	8/12.7	142/121	182/178	150/140	HD55、HQL5
	HSOD178	178.3	10	145	195	156	HD55、HQL5
	HSOD194	193.7	6/12.7	167/148	212/203	180/167	HD65、HQL6
	HSOD219	219.1	7/12.7	186/167	234	203/191	HD65、HQL6
	HSOD273	273	8/12.7	232/219	292	255/246	HD85、HQL8
	HSOD325	323.9	8/12.7	281/270	342/342	306/297	HD85、HSD8
	HSOD406	406.4	12.7	328	419	374	HSD10、HN125
	HSOD508	508	15	412	526	470	HD475、SD15
	HSOD609	609.6	15	513	637	570	HD525、SD18

零件图 Part Description



环形钻头
Ring Bit



管 靴
Casing Shoe



挡 圈
Retainer Ring



套 管
Casing



导向钻头
Pilot bit

SAMEN BEST TOOLS

潜孔扩孔钻头
DTH opener bits

产品展示 Products	D mm	D1 mm	边 齿 Gauge	正面齿 Front	产品编号 Part No.	可配钎柄 Shank
	165	82	14	14	HK165/82-HD45	DHD340 SD4 QL40
	178	99	16	14	HK178/99-HD45	
	190	115	16	14	HK190/115-HD55	DHD350 SD5 QL50
	216	138	16	14	HK216/138-HD55	
	254	159	16	14	HK254/159-HD65	DHD360 SD6 QL60
	305	208	16	16	HK305/208-HD65	
	381	296	16	16	HK381/296-HD65	
	305	208	16	16	HK305/208-HD85	DHD380 SD8 QL80
	381	296	16	16	HK381/296-HD85	
	445	305	18	16	HK445/305-SD10	SD10 NUMA100
	482	311	18	16	HK381/296-SD10	
	660	445	19	18	HK660/445-SD12	SD12 NUMA120

螺纹扩孔钻头
Thread opener bits

产品展示 Products	钎头直径D1 mm	导孔直径D2 mm	螺纹T Gauge	产品编号 Part No.
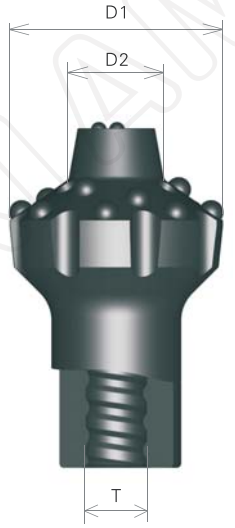	76	26	R32	HLK76/26-R32
	89	43	R32	HLK89/26-R32
	102	43	R38	HLK102/43-R38
	115	76	R38	HLK115/76-R38
	102	43	T38	HLK102/43-T38
	115	76	T38	HLK115/76-T38
	127	76	T45	HLK127/76-T45
	140	89	T45	HLK140/89-T45
	165	102	T51	HLK165/102-T51

XIAMEN BEST TOOLS

管壁扩孔钻头
Crown opener bits

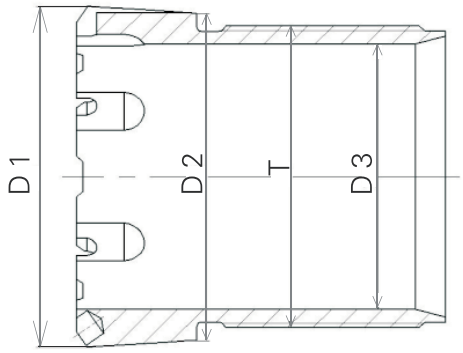

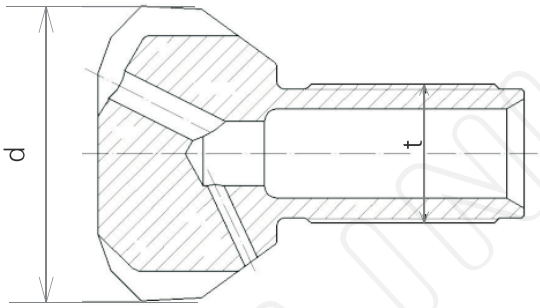

产品名称 Name of product	D1 mm	D2 mm	D3 mm	边 齿 Gauge	正面齿 Front	螺纹型号 Thread	产品编号 Part No.
Crown opener bits 	125	118	88	16	14	T104.5	HQK125/88-T104.5
	140	133	108	16	14	T122	HQK140/108-T122
	152	133	108	16	16	T122	HQK152/108-T122
	172	165	133	16	16	T146.5	HQK172/165-T146.5
	225	216	178	18	16	T203	HQK225/216-T203

产品名称 Name of product	d mm	t mm	边 齿 Gauge	正面齿 Front	螺纹型号 Thread	产品编号 Part No.
Inner opener bits 	83	56	13	12	R56×12.7	HWQK83-R56
	102	56	14	14	R56×12.7	HWQK102-R56
	116	78	16	14	R78×22.56	HWQK116-R78
	128	83	16	16	R83×22.56	HWQK128-R83
	165	120	18	16	R120×22.56	HWQK165-R120

XIAMEN BEST LINK

长 尾 巴 钻 头 Long shank bit



钎头直径 D mm	边齿 Gauge	正面齿 Front	水孔数量 Flushing holes	重量 Weight (Kg)	产品编号 Part-No
90	9×11	7×11	3×8	5.8	HROD76-90
95	9×12	7×11	3×8	6.0	HROD76-95
105	9×12	7×12	3×10	6.4	HROD76-105
105	9×13	7×12	3×13	9.1	HROD89-105
115	9×14	6×14	3×13	9.7	HROD89-115
127	9×14	7×14	3×13	10.6	HROD89-127
115	9×14	6×14	3×13	12.6	HROD102-115
127	9×14	7×14	3×13	13.2	HROD102-127
140	9×16	9×16	3×13	14.5	HROD102-140
140	9×16	9×16	3×15	21.3	HROD127-140
152	9×16	9×16	3×15	23.1	HROD127-152
165	10×16	10×16	3×15	23.9	HROD127-165

反 打 冲 击 器 Back hammer

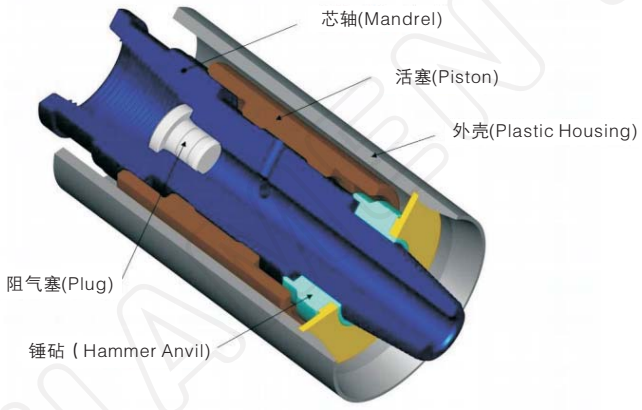

当设备在钻孔时发生卡钻时,反打冲击器为您节约时间和金钱.
反打冲击器可安装在位于钻孔夹持器和旋转头之间的钻管接头上,形成一种有效的反打打击和震动的结合效果.
反打冲击器坚固而可靠.只有三个部件和一个塑料外壳组成.塑料外壳除了引导废气排放外还起消音器的作用.保养工作只需在不使用时保持反打冲击器的清洁和注意连接部分的防护即可.

In case of jamming of any drilling tool in the boring process, the backhammer will help you save time and money.
The backhammer may be mounted on the drill pipe joint between the borehole gripper and the swivel head, thus creating a combined effect of effective reverse impact and vibration.
Sturdy and reliable, the backhammer is composed of three components and a plastic housing which acts both as an exhaust emissions guider and a muffler. With regards to the maintenance, it's only necessary to kecp it clean and the linking section we protected when the backhammer is not in use.

产品名称 Product	工作风压 Pressure	连接螺纹 Thread	总 长 Total Length (mm)	外径尺寸 Diameter (mm)	重量 Weight (Kg)
HBH14	8 Bar	API3 1/2"	510	180	31.0
HBH16	8 Bar	API3 1/2"	540	200	44.0
HBH19	8 Bar	API3 1/2"	540	225	63.0

钻 管 Drill Tube

A O D (mm)	C Tool Joints			J Length shoulder to flat		D Across Flat (mm)	Allowed Pull Down Unit. (KNm)	Approx Weight unit 3m long/kgs	E Width Spanner flat (mm)
	Connection	C1	C2	J1	J2				
Φ76	API 2 3/8"Reg	25.4	38.1	16	90.5	65	5.4	26.6	38.1
Φ89	API 2 3/8"Reg	28.6	38.1	11.1	76.2	69.8	11.2	53.4	60.3
Φ102	API 3 1/2"Reg	44.4	57.1	15.8	90.5	63.5	14.2	53.1	50.8
Φ114	API 3 1/2"Reg	38.1	57.1	15.8	69.8	92.2	22.2	77.4	69.8
Φ127	API 3 1/2"Reg	44.4	57.1	12.7	95.2	120.6	47	114	58.8s
Φ140	API 3 1/2"Reg	44.4	57.1	12.7	95.2	120.6	47	114	50.8
Φ152	API 4 1/2"Reg	76.2	85.7	19	120.6	130.1	52.9	127	60.3

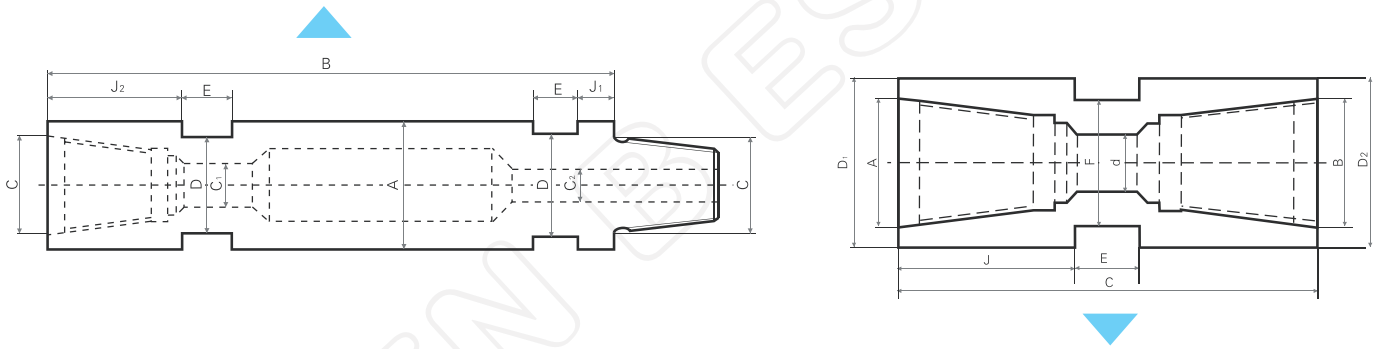

母 母 接 头 Box–Box Adapters

Connection		Length C (mm)	Length Shoulder J (mm)	Width Spanner flats E (mm)	Std bore d (mm)	Outside diameter		Across Flat F (mm)
Box up A	Box down B					Top D_1 (mm)	Bottom D_2 (mm)	
API 2 3/8"Reg	API 2 3/8"Reg	219	57.1	50.8	38.1	88.9	88.9	69.85
API 2 7/8"Reg	API 2 3/8"Reg	219	69.85	50.8	38.1	114.3	88.9	98.4
API 2 3/8"Reg	API 3 1/2"Reg	128.6	57.1	50.8	38.1	88.9	114.3	69.8
API 3 1/2"Reg	API 3 1/2"Reg	241.3	69.85	50.8	44.45	114.3	114.3	98.4
API 3 1/2"Reg	API 4 1/2"Reg	269.8	88.9	50.8	58.7	114.3	146	98.4
API 2 7/8"Reg	API 3 1/2"Reg	241.3	69.85	50.8	44.45	114.3	51.7	98.4
API 4 1/2"Reg	API 2 7/8"Reg	250.8	76.2	50.8	44.45	114.3	146	98.4

XIAMEN BEST LINK

公 母 接 头 Pin–Box Adapters

Connection		Length C (mm)	Length Shoulder J (mm)	Width Spanner flats E (mm)	Std bore d (mm)	Outside diameter		Across Flat F (mm)
Box up A	Box down B					Top D_1 (mm)	Bottom D_2 (mm)	
API 2 3/8"Reg	API 2 3/8"Reg	140	50.8	65	24	88.9	88.9	69.85
API 2 3/8"Reg	API 2 7/8"Reg	134.9	69.85	50.8	31.75	88.9	88.9	69.85
API 2 3/8"Reg	API 3 1/2"Reg	146	39.7	50.8	25.4	114.3	88.9	98.4
API 3 1/2"Reg	API 3 1/2"Reg	101.6	39.7	50.8	44.45	127	127	98.4
API 3 1/2"Reg	API 4 1/2"Reg	134.9	39.7	50.8	52.4	114.3	146	98.4
API 2 7/8"Reg	API 2 3/8"Reg	134.9	39.7	50.8	31.75	88.9	88.9	69.85
API 2 7/8"Reg	API 3 1/2"Reg	134.9	39.7	50.8	44.45	114.3	114.3	98.4
API 2 7/8"Reg	API 4 1/2"Reg	174.6	100	50.8	44.45	114.3	146	98.4

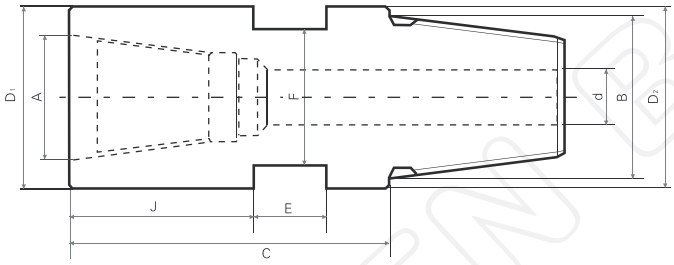

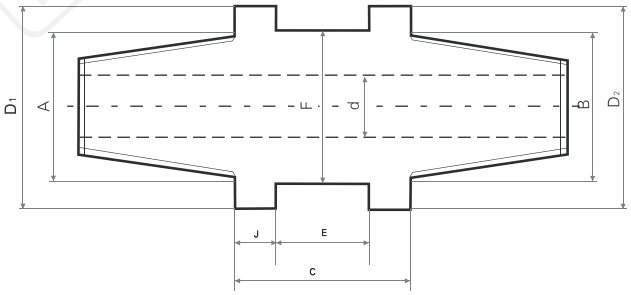

公 公 接 头 Pin–Pin Adapters

Connection		Length C (mm)	Length Shoulder J (mm)	Width Spanner flats E (mm)	Std bore d (mm)	Outside diameter		Across Flat F (mm)
Box up A	Box down B					Top D_1 (mm)	Bottom D_2 (mm)	
API 2 3/8"Reg	API 2 3/8"Reg	70	20	50.8	24	78	78	65
API 2 3/8"Reg	API 2 7/8"Reg	152.4	50.8	50.8	25.4	88.9	88.9	69.85
API 2 3/8"Reg	API 3 1/2"Reg	96	35	50.8	24	114.3	114.3	98.4
API 3 1/2"Reg	API 3 1/2"Reg	177.8	63.5	50.8	44.45	114.3	114.3	98.4
API 3 1/2"Reg	API 4 1/2"Reg	92	12.7	69.85	38.1	114.3	139.7	120.65
API 4 1/2"Reg	API 4 1/2"Reg	203.2	76.2	50.8	58.7	146	146	120.65

YOUMEN BESTLINK

冲击器拆卸台 Breakout bench for DTH hammer

The threaded connections of the driver chuck and top sub may become very tightly tensioned during drilling. It is convenient to break the hammer threads on the rig, but if the threads cannot be loosened or tend to get stuck, a breakout bench is the best solution.

The handy but powerful break out bench, can be easily placed in a workshop or container.
there are 3 models:

Note: *the standard motor request power source with 3phase,380V,50Hz .we can adjust the motor as customers' request.

Operating principle	by hydraulic jack (manual)		by electric motor*
Operate hammers	3"- 5"	6"- 8"	3.5"- 8"
Model	CX-5	CX-8	ECX3-8
Length(mm)	920	1100	1060
Width (mm)	51	620	930
Height (mm)	875	875	1050
Weight (kg)	200	230	800

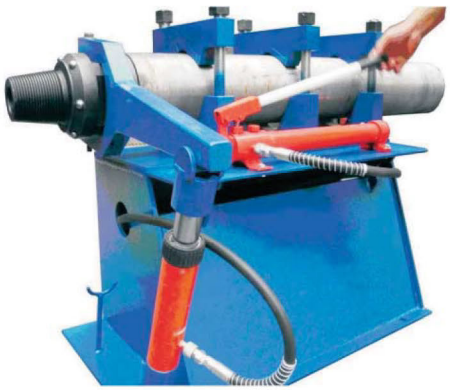





潜 孔 冲 击 器 的 使 用 与 维 护
Operation And Maintainence Guidelines

I. Summary 概述

The high air pressure DTH hammer is designed as DTH rock drilling tool. It differs from other rock drilling tools in the way that this kind of hammer always stays in the bottom of the hole during the operation while the piston punches down directly against the drill bit. Compressed air is led to the DTH hammer through the drill tube. Exhaust air is discharged through hole in drill bit and used to flush out the cuttings to clean the drill hole. Rotation is delivered from a rotation unit and feed force from the feed is transferred to the DTH hammer via the drill tube.

II.Technical description 结构原理

The DTH hammer comprises a narrow ,elongated external cylinder which contains a piston,an internal cylinder, an air distributor and a check valve. The top sub with a spanner slot and coupling thread is fitted to the top side of the external cylinder. The bottom part. the drive chuck, also with thread, encloses the drill bit and transfers feed force as well as rotation to the drill bit. A stop ring limits axial movements of the drill bit. The purpose of the check valve is to prevent impurities from getting into the DTH hammer when operating pressure is shut off. During drilling ,the drill bit is pushed into the DTH hammer and pressed against the drive chuck. The piston strikes directly against the impact surface of the bit, when the bit loses contact with the bottom of the hole, air is blown down strongly.

III.Operation and maintenance 使用与维护

1)The drive chuck and top sub are threaded into the cylinder with right hand threads. The hammer must be always operated with right hand rotation.

2)While starting drilling, use the impact and feed force, let the bit work its way slightly into the rock.

3)It is important that the feed force is in accordance with the weight of the drill strings. The force from the feed motor needs to be adjusted during drilling.depending on the variable weight of the drill string.

4) The normal rotation speed for DTH hammer lies between 15-25rpm.Faster rotation means faster drilling .However, in highly abrasive rock, rotation speed should be reduced to avoid excessive wear of the drill bit.

5)Clogged or cave-in of the hole, can lead to drill stuck .It is important to regularly clean the hole intervals by carrying out strong air-blowing with the DTH hammer.

6)Jointing operation is the work sequence where a DTH hammer is most likely to experience contamination of cuttings and various kinds of impurities. Cover the thread end of the drill tube and make sure that it it free from cutting and dirt.

7) It is important to keep the DTH hammer lubricated properly. Inadequate lubrication accelerates wear and can lead to the DTH hammer breakdown.

IV.Trouble shooting 常见故障排除方法

1)Fault: wear or scoring caused by inadequate or no lubrication.

Cause: Oil does not reach the impact structure of the DTH hammer.

Remedy: Inspect the lubrication device, increase oil if necessary, or increase oil dosage.

2)Fault: Impact mechanism does not operate, or works with reduced efficiency.

Cause:

a)Air way is throttled or blocked.

b)Too much clearance between the piston and the internal cylinder, or between the piston and the external cylinder, or between the piston and the air distributor.

c)The DTH hammer is dogged by impurities.

d)Piston failure of foot valve failure.

Remedy:

a)Check the air pressure ,check if the air way is clear.

b)Disassemble the DTH hammer and inspect the wear. replace worn part if necessary.

c)Disassemble the DTH hammer and clean all internal components.

d)Disassemble the DTH hammer replace the fractured piston or sit up a new bit.

3)Fault: Lost drill bit and driver chuck.

Cause: Impact mechanism was operated without right-hand rotation.

Remedy: Fish up the dropped equipment with a fishing tool. Remember to always use right-hand rotation, both when drilling and when lifting the drill string.

V.Hammer cleaning and inspection 冲击器的清洗检测

1)Wash all the parts removed with detergent thoroughly and dry the parts by compressed air.

2)Check every part, polish and repair them if there are scratching, replace the parts if there are hot crack and breakage.

3)Check the drive chuck, replace a new one when the outer cylinder thinner than the external cylinder diameter,otherwise,it will accelerate the wearing of outer cylinder.

4)Check drive chuck splines,insert a new drill bit into drive chuck splines and twist, drive chuck should be replaced in time if the rotation range is more than 5mm,otherwise it will cause the bit body failing.

5)The parts should be coated with lubricating oil before assembly.

Notice: Please choose our original accessories to guarantee the good performance of hammers.

BESTLINK
倍联机械

XIAMEN BESTLINK

厦门倍联矿山机械有限公司
XIAMEN BESTLINK FACTORY CO.,LTD.
地址：厦门市湖里区长乐路350号闽南古镇A部8001单元
Add:Unit 8001 ,Part A,Minnan culture town,No.350 Changle road,Huli,Xiamen,China. Post Code:361006
Tel:+86 592 5601702 / 5682036 Mobile:+86 13600966313
Fax:+86 592 5601703 / 5602971 www.split-stone.com
E-mail:info@quarryingtools.com www.quarryingtools.com